LOT 29
PAGE HILL #3 PB 6/341

KENDALL DENNIS & DIAN
861307 WORTHINGTON DR
YULEE, FL 32097

2026

51-3N-27-1627-0029-0000

BUILDING CHARACTERISTICS

ELEMENT	CD	CONSTRUCTION
Exterior Wall	30	VINYL 70
Exterior Wall	20	FACE BRICK 30
Roof Structur	03	GABLE/HIP 100
Roof Cover	03	COMP SHNGL 100
Interior Wall	05	DRYWALL 100
Interior Floo	14	CARPET 80
Interior Floo	08	SHT VINYL 20
Air Condition	03	CENTRAL 100
Heating Type	04	AIR DUCTED 100
Bedrooms		3 100
Bathrooms		2 100
Frame	02	WOOD FRAME 100
Stories	1.	1. 100
Units		0 100
Occupancy	00	NONE 100
Quality	01	Quality Level 01
DOR CODE	0100	SINGLE FAMILY
MAP NUM		MKT AREA 04
NEIGHBORHOOD/LOC	4039.00	

AREA TYPE	TOTAL GROSS AREA	PCT OF BASE	YEAR	TOT ADJ AREA	SUBAREA MARKET VALUE
BAS	1,340	100	2005	1,340	163,351
FGR	475	55	2005	261	31,817
FOP	9	30	2005	3	365
FSP	120	40	2005	48	5,851
TOTALS	1,944			1,652	201,385

MARKET ADJUSTMENTS

TYPE	MDL	EFF. AREA	TOT ADJ PTS	EFF. BASE RATE	REPL. COST NEW	AYB	EYB	ECON	FNCT		NORM	% COND
0900	01	1,652	98.9100	137.48	227,117	2005	2005	0	0	0	11.33	88.67

1 SNGL FAM 100% - 2023 Heated Area: 1340 HX Base Yr 2023

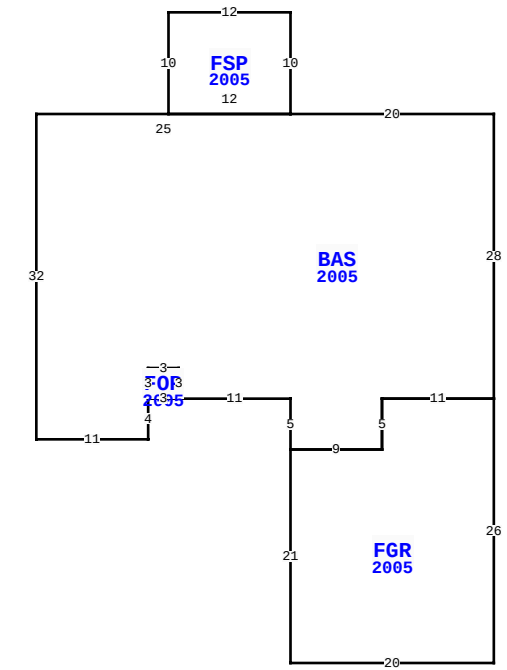

861307 WORTHINGTON DR, YULEE

BLD DATE		LGL DATE	
XF DATE		LAND DATE	03/23/2026 MLU
INC DATE		AG DATE	

NASSAU COUNTY PROPERTY

PAGE 1 of 1 4

VALUATION SUMMARY

VALUATION BY		STANDARD
Tax Group: 4	Tax Dist:	
BUILDING MARKET VALUE		201,385
TOTAL MARKET OB/XF VALUE		0
TOTAL LAND VALUE - MARKET		90,000
TOTAL MARKET VALUE		291,385
SOH/AGL Deduction		184,506
ASSESSED VALUE		106,879
TOTAL EXEMPTION VALUE	HX HB	51,411
BASE TAXABLE VALUE		55,468
TOTAL JUST VALUE		291,385
NCON VALUE		0
INCOME VALUE		
PREVIOUS YEAR MKT VALUE		303,852

PERMIT NUM	DESCRIPTION	AMT	ISSUED
E0514888	ELEC OTHER	0	05/01/2005
M09271	MECH OTHER	0	02/01/2005
E0514228	ELEC OTHER	2,000	02/01/2005
P0408795	OTHER	0	12/01/2004
B0413943	NEW CONSTR	162,800	10/01/2004
R046806	REPAIR/RRF	1,300	10/01/2004

SALES DATA

OFF RECORD Number	DATE	TYPE INST	Q / U	V / I	RSN CD	SALE PRICE
2592/0384	7/15/2022	WD	Q	I	01	325,000
GRANTOR: GIOVANNI PATRICK						
GRANTEE: KENDALL DENNIS & DI						
1912/1896	4/11/2014	SW	U	I	12	84,000
GRANTOR: FANNIE MAE						
GRANTEE: GIOVANNI PATRICK						

BUILDING NOTES

BUILDING DIMENSIONS

BAS=[YR=2005] W20 FSP=[YR=2005] N10 W12 S10 E12$ W25 S32 E11 N4 FOP=[YR=2005] E3 N3 W3 S3$ N3 E3 S3 E11 S5 FGR=[YR=2005] S21 E20 N26 W11 S5 W9$ E9 N5 E11 N28$.

EXTRA FEATURES

LN	OB/XF CODE	DESCRIPTION	BLD	CAP	L	W	UNITS	UT	Adj R	ADJ UNIT PRICE	ORIG COND	YEAR ON	YEAR ACTUAL	Q	% COND	OB/XF MKT VALUE	NOTES

LAND DESCRIPTION

TOTAL OB/XF 0

LN	USE CODE	CLS	LAND USE DESCRIPTION	CAP	RD	LOC ZONE	FRONT	DEPTH	TOT LND UTS	UNIT TYPE	DT	DPTH FACT	% COND	TOT ADJ	UNIT PRICE	ADJ UNIT PRICE	LAND VALUE	OTHER ADJUSTMENTS AND NOTES	YEAR	DENSITY	DECL	FRZ	YR	CONSRV
1	000100	C	RES	100	0003	RSF-1	0.00	0.00	1.00	LT		1.00	1.00	1.00	90,000.00	90,000.00	90,000							

REVIEW DATE 01/06/2023 BY NWA Total Acres: 0.00 Total Land Value: 90,000 Market: 0 Agricultural: 0 Common: 90,000 PRINTED 07/09/2026 BY SYS