LOT 8 (EX S-1)
IN OR 2146/21
BLACKROCK HAMMOCK PB 6/286

ALDRED RUSSELL J & KELLY A
96014 BLACKROCK HAMMOCK DR
YULEE, FL 32097

2026

50-3N-28-016B-0008-0000

BUILDING CHARACTERISTICS

ELEMENT	CD	CONSTRUCTION
Exterior Wall	31	HARDIE BRD 90
Exterior Wall	20	FACE BRICK 10
Roof Structur	08	IRREGULAR 100
Roof Cover	03	COMP SHNGL 100
Interior Wall	05	DRYWALL 100
Interior Floo	12	HARDWOOD 50
Interior Floo	14	CARPET 50
Air Condition	03	CENTRAL 100
Heating Type	04	AIR DUCTED 100
Bedrooms		5 100
Bathrooms		4.5 100
Frame	02	WOOD FRAME 100
Stories	2.	2. 100
Units		0 100
Occupancy	00	NONE 100
Quality	01	Quality Level 01
DOR CODE	0100	SINGLE FAMILY
MAP NUM		MKT AREA 04
NEIGHBORHOOD/LOC	4028.00	

AREA TYPE	TOTAL GROSS AREA	PCT OF BASE	YEAR	TOT ADJ AREA	SUBAREA MARKET VALUE
BAS	518	100	2007	518	68,134
BAS	2,735	100	2007	2,735	359,738
FGR	790	55	2007	434	57,084
FOP	70	30	2007	21	2,762
FOP	312	30	2007	94	12,364
FOP	372	30	2007	112	14,731
FUS	992	100	2007	992	130,479
PTO	80	5	2007	4	526
TOTALS	5,869			4,910	645,819

MARKET ADJUSTMENTS

TYPE	MDL	EFF. AREA	TOT ADJ PTS	EFF. BASE RATE	REPL. COST NEW	AYB	EYB	ECON	FNCT		NORM	% COND
0500	01	4,910	87.0750	144.54	709,691	2007	2007	0	0	0	9.00	91.00

1 SFR CUST 100% - 2018 Heated Area: 4245 HX Base Yr 2018

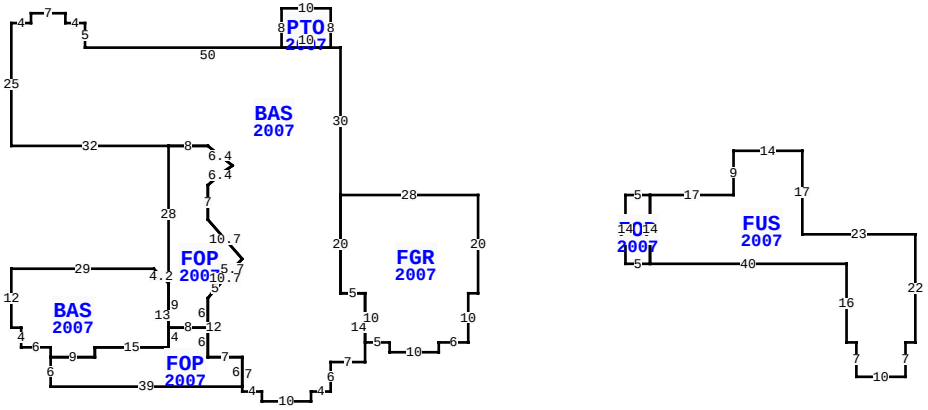

96014 BLACKROCK HAMMOCK DR, YULEE

BLD DATE	04/04/2023 NW	LGL DATE	
XF DATE	10/11/2007 RK	LAND DATE	04/01/2025 MLU
INC DATE		AG DATE	

NASSAU COUNTY PROPERTY

PAGE 1 of 1 4

VALUATION SUMMARY

VALUATION BY		STANDARD
Tax Group: 4	Tax Dist:	
BUILDING MARKET VALUE		645,819
TOTAL MARKET OB/XF VALUE		52,404
TOTAL LAND VALUE - MARKET		170,000
TOTAL MARKET VALUE		868,223
SOH/AGL Deduction		300,048
ASSESSED VALUE		568,175
TOTAL EXEMPTION VALUE	HX HB	51,411
BASE TAXABLE VALUE		516,764
TOTAL JUST VALUE		868,223
NCON VALUE		0
INCOME VALUE		
PREVIOUS YEAR MKT VALUE		827,488

PERMIT NUM	DESCRIPTION	AMT	ISSUED
R2008695	REPAIR/RRF	51,000	10/01/2020
E1906754	SOLAR PANELS	67,730	08/07/2019
M12716	MECH OTHER	0	02/01/2007
B16914	SWIM POOL	25,000	01/01/2006
E16113	ELEC OTHER	2,000	11/01/2005
M10694	MECH OTHER	0	11/01/2005

SALES DATA

OFF RECORD Number	DATE	TYPE INST	Q / U	V / I	RSN CD	SALE PRICE
2146/0021	9/18/2017	WD	Q	I	02	525,000
GRANTOR: GRAY JOSEPH F & MELIS						
GRANTEE: ALDRED RUSSELL J &						
1659/1300	1/15/2010	WD	Q	I	01	465,000
GRANTOR: KONDRA JANE						
GRANTEE: GRAY JOSEPH F & MEL						

BUILDING NOTES

EXTRA FEATURES

LN	OB/XF CODE	DESCRIPTION	BLD	CAP	L	W	UNITS	UT	Adj R	ADJ UNIT PRICE	ORIG COND	YEAR ON	YEAR ACTUAL	Q	% COND	OB/XF MKT VALUE	NOTES
2	0860	POOL/SPA	0	100	0	0	1.00	UT	60,000.00	60,000.00	100	2007	2007	05	85	51,000	
3	0911	SCRN RM A	0	100	0	0	325.00	SF	18.00	18.00	100	2007	2007	3	24	1,404	

BUILDING DIMENSIONS

BAS=[YR=2007;ORIG=-28,0] N30 W2 W50 N5 W4 N2 W7 S2 W4 S25 E32 E8 D4R5 D2L3 D2L2 S7 D8R7 D4L4 D4L3 S12 E7 S7 E4 S2 E10 N2 E4 N6 E7 N14 W5 N20 $
FUS=[YR=2007;ORIG=35,0] E17 N9 E14 S17 E23 S22 W2 S7 W10 N7 W2 N16 W40 N14 $
FGR=[YR=2007;ORIG=0,0] W28 S20 E5 S10 E5 S2 E10 N2 E6 N10 E2 N20 $
BAS=[YR=2007;ORIG=-63,18] U3L3 W29 S12 E2 S4 E6 S2 E9 N2 E15 N13 $
FOP=[YR=2007;ORIG=-63,-10] S28 S9 E8 N6 U8R7 U8L7 N7 U4R5 U4L5 W8 $
FOP=[YR=2007;ORIG=-87,33] S6 E39 N6 W7 N6 W8 S4 W15 S2 W9 $

LAND DESCRIPTION

TOTAL OB/XF 52,404

LN	USE CODE	CLS	LAND USE DESCRIPTION	CAP	RD	LOC ZONE	FRONT	DEPTH	TOT LND UTS	UNIT TYPE	DT	DPTH FACT	% COND	TOT ADJ	UNIT PRICE	ADJ UNIT PRICE	LAND VALUE	OTHER ADJUSTMENTS AND NOTES	YEAR	DENSITY	DECL	FRZ	YR	CONSRV
1	000100	C	RES	100		RSF-1	0.00	0.00	1.00	LT		1.00	1.00	1.00	170,000.00	170,000.00	170,000							

REVIEW DATE 01/01/2023 BY CD Total Acres: 0.00 Total Land Value: 170,000 Market: 0 Agricultural: 0 Common: 170,000 PRINTED 07/09/2026 BY SYS