LOT 353
DEL WEBB WILDLIGHT PHASE 2A
OR 2571/536

ELLISON DEBORAH
779 CONTINUUM LOOP
YULEE, FL 32097

2026

50-3N-27-1004-0353-0000

BUILDING CHARACTERISTICS

ELEMENT	CD	CONSTRUCTION
Exterior Wall	31	HARDIE BRD 100
Roof Structur	03	GABLE/HIP 100
Roof Cover	03	COMP SHNGL 100
Interior Wall	05	DRYWALL 100
Interior Floo	13	LVT/LAMNT 100
Interior Floo	01	NONE 0
Air Condition	03	CENTRAL 100
Heating Type	04	AIR DUCTED 100
Bedrooms		2 100
Bathrooms		2 100
Frame	02	WOOD FRAME 100
Stories	1.	1. 100
Units		0 100
Quality	06	Quality Level 06
DOR CODE	0100	SINGLE FAMILY
MAP NUM		MKT AREA 04
NEIGHBORHOOD/LOC	4094.00	

AREA TYPE	TOTAL GROSS AREA	PCT OF BASE	YEAR	TOT ADJ AREA	SUBAREA MARKET VALUE
BAS	1,802	100	2024	1,802	308,968
FGR	669	55	2024	368	63,097
FOP	144	30	2024	43	7,373
FSP	322	40	2024	129	22,118
PTO	120	5	2024	6	1,029
TOTALS	3,057			2,348	402,584

MARKET ADJUSTMENTS

TYPE	MDL	EFF. AREA	TOT ADJ PTS	EFF. BASE RATE	REPL. COST NEW	AYB	EYB	ECON	FNCT		NORM	% COND
0900	01	2,348	123.9700	172.32	404,607	2023	2023	0	0	0	0.50	99.50

1 SNGL FAM 0% - 2026 Heated Area: 1802 HX Base Yr

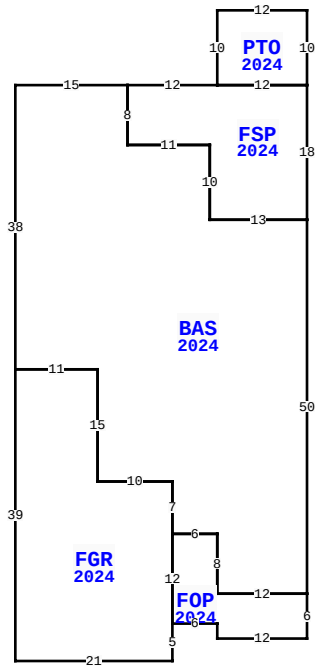

779 CONTINUUM LOOP, YULEE

BLD DATE		LGL DATE	
XF DATE		LAND DATE	05/13/2025 MLU
INC DATE		AG DATE	

NASSAU COUNTY PROPERTY

PAGE 1 of 1 4

VALUATION SUMMARY

VALUATION BY	STANDARD
Tax Group: 4	Tax Dist:
BUILDING MARKET VALUE	402,584
TOTAL MARKET OB/XF VALUE	0
TOTAL LAND VALUE - MARKET	85,000
TOTAL MARKET VALUE	487,584
SOH/AGL Deduction	0
ASSESSED VALUE	487,584
TOTAL EXEMPTION VALUE	0
BASE TAXABLE VALUE	487,584
TOTAL JUST VALUE	487,584
NCON VALUE	0
INCOME VALUE	
PREVIOUS YEAR MKT VALUE	475,557

PERMIT NUM	DESCRIPTION	AMT	ISSUED
230007264	CO ISSUED		06/06/2023
22012342	NEW CONSTR	307,161	08/12/2022

SALES DATA

OFF RECORD Number	DATE	TYPE INST	Q U	V I	RSN CD	SALE PRICE
2785/478	4/24/2025	WD	Q	I	01	524,000
GRANTOR: KAHOUN JOAN MCATEE						
GRANTEE: ELLISON DEBORAH						
2649/1060	6/16/2023	SW	Q	I	01	567,800
GRANTOR: PULTE HOME COMPANY LL						
GRANTEE: KAHOUN FRED CHARLES						

BUILDING NOTES

BUILDING DIMENSIONS

BAS=[YR=2024;ORIG=101,-10] E15 S8 E11 S10 E13 S50 W12 N8 W6 N7 W10 N15 W11 N38 $
FSP=[YR=2024;ORIG=140,-10] W12 W12 S8 E11 S10 E13 N18 $
FOP=[YR=2024;ORIG=140,58] W12 N8 W6 S12 E6 S2 E12 N6 $
FGR=[YR=2024;ORIG=101,28] E11 S15 E10 S7 S12 S5 W21 N39 $
PTO=[YR=2024;ORIG=128,-20] E12 S10 W12 N10 $
.

EXTRA FEATURES

LN	OB/XF CODE	DESCRIPTION	BLD	CAP	L	W	UNITS	UT	Adj R	ADJ UNIT PRICE	ORIG COND	YEAR ON	YEAR ACTUAL	Q	% COND	OB/XF MKT VALUE	NOTES

LAND DESCRIPTION

TOTAL OB/XF 0

LN	USE CODE	CLS	LAND USE DESCRIPTION	CAP	RD	LOC ZONE	FRONT	DEPTH	TOT LND UTS	UNIT TYPE	DT	DPTH FACT	% COND	TOT ADJ	UNIT PRICE	ADJ UNIT PRICE	LAND VALUE	OTHER ADJUSTMENTS AND NOTES	YEAR	DENSITY	DECL	FRZ	YR	CONSRV
1	000134	C	RES POND	0		PD -	E 0.00	0.00	1.00	LT		1.00	1.00	1.00	85,000.00	85,000.00	85,000							

REVIEW DATE 05/01/2025 BY KB Total Acres: 0.00 Total Land Value: 85,000 Market: 0 Agricultural: 0 Common: 85,000 PRINTED 07/09/2026 BY SYS