LOT 267
DEL WEBB WILDLIGHT PHASE 2B
OR 2608/961

WOOD KEVIN S & ALYCIA L
269 CONTINUUM LOOP
YULEE, FL 32097

2026

50-3N-27-1004-0267-0000

NASSAU COUNTY PROPERTY

BUILDING CHARACTERISTICS

ELEMENT	CD	CONSTRUCTION
Exterior Wall	31	HARDIE BRD 100
Roof Structur	03	GABLE/HIP 100
Roof Cover	03	COMP SHNGL 100
Interior Wall	05	DRYWALL 100
Interior Floo	13	LVT/LAMNT 100
Interior Floo	01	NONE 0
Air Condition	03	CENTRAL 100
Heating Type	04	AIR DUCTED 100
Bedrooms		2 100
Bathrooms		2 100
Frame	02	WOOD FRAME 100
Stories	1.	1. 100
Units		0 100
Quality	06	Quality Level 06

DOR CODE 0100 SINGLE FAMILY
MAP NUM | MKT AREA 04
NEIGHBORHOOD/LOC 4094.00

AREA TYPE	TOTAL GROSS AREA	PCT OF BASE	YEAR	TOT ADJ AREA	SUBAREA MARKET VALUE
BAS	1,841	100	2026	1,841	317,241
FGR	654	55	2026	360	62,035
FOP	30	30	2026	9	1,551
FOP	322	30	2026	97	16,715
TOTALS	2,847			2,307	397,542

MARKET ADJUSTMENTS

TYPE	MDL	EFF. AREA	TOT ADJ PTS	EFF. BASE RATE	REPL. COST NEW	AYB	EYB	ECON	FNCT		NORM	% COND
0900	01	2,307	123.9700	172.32	397,542	2025	2025	0	0	0	0.00	100.00

1 SNGL FAM 100% - 2026 Heated Area: 1841 HX Base Yr 2026

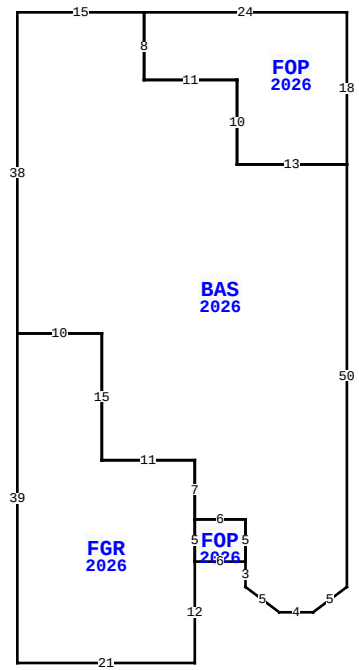

269 CONTINUUM LOOP, YULEE

BLD DATE		LGL DATE	
XF DATE		LAND DATE	05/13/2025 MLU
INC DATE		AG DATE	

VALUATION SUMMARY

VALUATION BY		STANDARD
Tax Group: 4	Tax Dist:	
BUILDING MARKET VALUE		397,542
TOTAL MARKET OB/XF VALUE		0
TOTAL LAND VALUE - MARKET		85,000
TOTAL MARKET VALUE		482,542
SOH/AGL Deduction		174,439
ASSESSED VALUE		308,103
TOTAL EXEMPTION VALUE	HX HB	51,411
BASE TAXABLE VALUE		256,692
TOTAL JUST VALUE		482,542
NCON VALUE		397,542
INCOME VALUE		
PREVIOUS YEAR MKT VALUE		85,000

PERMIT NUM	DESCRIPTION	AMT	ISSUED
CO250007922	CO ISSUED		07/17/2025
B250003617	PRIVATE PROVIDER	366,699	04/08/2025

SALES DATA

OFF RECORD Number	DATE	TYPE INST	Q U	V I	RSN CD	SALE PRICE
2807/1682	8/05/2025	SW	Q	I	01	551,200

GRANTOR: PULTE HOME COMPANY LL
GRANTEE: WOOD KEVIN S & ALYC

BUILDING NOTES

BUILDING DIMENSIONS

FGR=[YR=2026;ORIG=60,28] E10 S15 E11 S7 S5 S12 W21 N39 $
FOP=[YR=2026;ORIG=81,50] E6 S5 W6 N5 $
FOP=[YR=2026;ORIG=75,-10] E24 S18 W13 N10 W11 N8 $
BAS=[YR=2026;ORIG=99,8] W13 N10 W11 N8 W15 S38 E10 S15 E11 S7 E6 S5 S3 D3R4 E4 U3R4 N50 $
.

EXTRA FEATURES

LN	OB/XF CODE	DESCRIPTION	BLD	CAP	L	W	UNITS	UT	Adj R	ADJ UNIT PRICE	ORIG COND	YEAR ON	YEAR ACTUAL	Q	% COND	OB/XF MKT VALUE	NOTES

LAND DESCRIPTION

TOTAL OB/XF 0

LN	USE CODE	CLS	LAND USE DESCRIPTION	CAP	RD	LOC ZONE	FRONT	DEPTH	TOT LND UTS	UNIT TYPE	DT	DPTH FACT	% COND	TOT ADJ	UNIT PRICE	ADJ UNIT PRICE	LAND VALUE	OTHER ADJUSTMENTS AND NOTES	YEAR	DENSITY	DECL	FRZ	YR	CONSRV
1	000100	C	RES	100		PD -	E 0.00	0.00	1.00	LT		1.00	1.00	1.00	85,000.00	85,000.00	85,000							

REVIEW DATE 07/07/2025 BY WW Total Acres: 0.00 Total Land Value: 85,000 Market: 0 Agricultural: 0 Common: 85,000 PRINTED 07/09/2026 BY SYS