LOT 212
DEL WEBB WILDLIGHT PHASE 2B
OR 2608/961

UTZSCHNEIDER JOHN R/ENG ALICE F
622 WITTY BANTER CT
YULEE, FL 32097

2026

50-3N-27-1004-0212-0000

BUILDING CHARACTERISTICS

ELEMENT	CD	CONSTRUCTION
Exterior Wall	31	HARDIE BRD 100
Roof Structur	03	GABLE/HIP 100
Roof Cover	03	COMP SHNGL 100
Interior Wall	05	DRYWALL 100
Interior Floo	13	LVT/LAMNT 100
Air Condition	03	CENTRAL 100
Heating Type	04	AIR DUCTED 100
Bedrooms		4 100
Bathrooms		4 100
Frame	02	WOOD FRAME 100
Stories	1.5	1.5 100
Units		0 100
Quality	06	Quality Level 06
DOR CODE	0100	SINGLE FAMILY
MAP NUM		MKT AREA 04
NEIGHBORHOOD/LOC	4094.00	

AREA TYPE	TOTAL GROSS AREA	PCT OF BASE	YEAR	TOT ADJ AREA	SUBAREA MARKET VALUE
BAS	2,512	100	2025	2,512	401,141
FGR	684	55	2025	376	60,043
FOP	66	30	2025	20	3,194
FOP	253	30	2025	76	12,136
FUS	946	100	2025	946	151,067
PTO	120	5	2025	6	958
TOTALS	4,581			3,936	628,540

MARKET ADJUSTMENTS

TYPE	MDL	EFF. AREA	TOT ADJ PTS	EFF. BASE RATE	REPL. COST NEW	AYB	EYB	ECON	FNCT		NORM	% COND
0900	01	3,936	114.8850	159.69	628,540	2024	2024	0	0	0	0.00	100.00

1 SNGL FAM 100% - 2025 Heated Area: 3458 HX Base Yr 2025

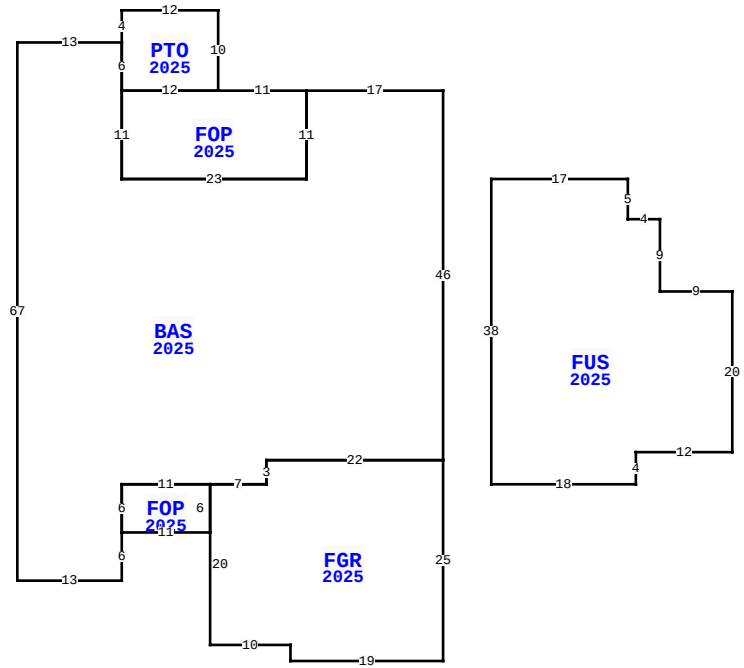

622 WITTY BANTER CT, YULEE

BLD DATE		LGL DATE	
XF DATE		LAND DATE	04/30/2026 MLU
INC DATE		AG DATE	

NASSAU COUNTY PROPERTY

PAGE 1 of 1 4

VALUATION SUMMARY

VALUATION BY		STANDARD
Tax Group: 4	Tax Dist:	
BUILDING MARKET VALUE		628,540
TOTAL MARKET OB/XF VALUE		0
TOTAL LAND VALUE - MARKET		148,750
TOTAL MARKET VALUE		777,290
SOH/AGL Deduction		45,296
ASSESSED VALUE		731,994
TOTAL EXEMPTION VALUE	HX HB	51,411
BASE TAXABLE VALUE		680,583
TOTAL JUST VALUE		777,290
NCON VALUE		0
INCOME VALUE		
PREVIOUS YEAR MKT VALUE		712,750

PERMIT NUM	DESCRIPTION	AMT	ISSUED
230008303	NEW SFR	637,182	06/28/2023
230004320			

SALES DATA

OFF RECORD Number	DATE	TYPE INST	Q U	V I	RSN CD	SALE PRICE
2691/1956	1/26/2024	SW	Q	I	02	846,200

GRANTOR: PULTE HOME COMPANY LL

GRANTEE: UTZSCHNEIDER JOHN R

BUILDING NOTES

EXTRA FEATURES

LN	OB/XF CODE	DESCRIPTION	BLD	CAP	L	W	UNITS	UT	Adj R	ADJ UNIT PRICE	ORIG COND	YEAR ON	YEAR ACTUAL	Q	% COND	OB/XF MKT VALUE	NOTES

BUILDING DIMENSIONS

BAS=[YR=2025;ORIG=120,-4] W17 S11 W23 N11 N6 W13 S67 E13 N6 N6 E11 E7 N3 E22 N46 $
FOP=[YR=2025;ORIG=80,45] E11 S6 W11 N6 $
FGR=[YR=2025;ORIG=91,45] E7 N3 E22 S25 W19 N2 W10 N20 $
FOP=[YR=2025;ORIG=80,-4] E12 E11 S11 W23 N11 $
PTO=[YR=2025;ORIG=80,-14] E12 S10 W12 N6 N4 $
FUS=[YR=2025;ORIG=126,7] E17 S5 E4 S9 E9 S20 W12 S4 W18 N38 $
.

LAND DESCRIPTION

TOTAL OB/XF 0

LN	USE CODE	CLS	LAND USE DESCRIPTION	CAP	RD	LOC ZONE	FRONT	DEPTH	TOT LND UTS	UNIT TYPE	DT	DPTH FACT	% COND	TOT ADJ	UNIT PRICE	ADJ UNIT PRICE	LAND VALUE	OTHER ADJUSTMENTS AND NOTES	YEAR	DENSITY	DECL	FRZ	YR	CONSRV
1	000135	C	RES NATURAL	100		PD -	E 0.00	0.00	1.00	LT		1.00	1.00	1.75	85,000.00	148,750.00	148,750							

REVIEW DATE 05/13/2025 BY MLU Total Acres: 0.00 Total Land Value: 148,750 Market: 0 Agricultural: 0 Common: 148,750 PRINTED 07/09/2026 BY SYS