LOT 130
DEL WEBB WILDLIGHT PHASE 2A
OR 2571/536

CARNEY REVOCABLE TRUST/CARNEY LANCE M TRUSTEE
244 ETHERAL SQUARE
YULEE, FL 32097

**2026**

**50-3N-27-1004-0130-0000**

## NASSAU COUNTY PROPERTY



## BUILDING CHARACTERISTICS

| ELEMENT | CD | CONSTRUCTION |
|---|---|---|
| Exterior Wall | 31 | HARDIE BRD 100 |
| Roof Structur | 03 | GABLE/HIP 100 |
| Roof Cover | 03 | COMP SHNGL 100 |
| Interior Wall | 05 | DRYWALL 100 |
| Interior Floo | 13 | LVT/LAMNT 100 |
| Air Condition | 03 | CENTRAL 100 |
| Heating Type | 04 | AIR DUCTED 100 |
| Bedrooms | | 2 100 |
| Bathrooms | | 2 100 |
| Frame | 02 | WOOD FRAME 100 |
| Stories | 1. | 1. 100 |
| Units | | 0 100 |
| Quality | 06 | Quality Level 06 |

DOR CODE 0100 SINGLE FAMILY
MAP NUM | MKT AREA 04
NEIGHBORHOOD/LOC 4094.00

| AREA TYPE | TOTAL GROSS AREA | PCT OF BASE | YEAR | TOT ADJ AREA | SUBAREA MARKET VALUE |
|---|---|---|---|---|---|
| BAS | 1,932 | 100 | 2024 | 1,932 | 331,257 |
| FGR | 669 | 55 | 2024 | 368 | 63,097 |
| FOP | 144 | 30 | 2024 | 43 | 7,373 |
| FSP | 192 | 40 | 2024 | 77 | 13,203 |
| PTO | 264 | 5 | 2025 | 13 | 2,229 |
| TOTALS | 3,201 | | | 2,433 | 417,159 |

## MARKET ADJUSTMENTS

| TYPE | MDL | EFF. AREA | TOT ADJ PTS | EFF. BASE RATE | REPL. COST NEW | AYB | EYB | ECON | FNCT | | NORM | % COND |
|---|---|---|---|---|---|---|---|---|---|---|---|---|
| 0900 | 01 | 2,433 | 123.9700 | 172.32 | 419,255 | 2023 | 2023 | 0 | 0 | 0 | 0.50 | 99.50 |

1 SNGL FAM 100% - 2024 Heated Area: 1932 HX Base Yr 2024

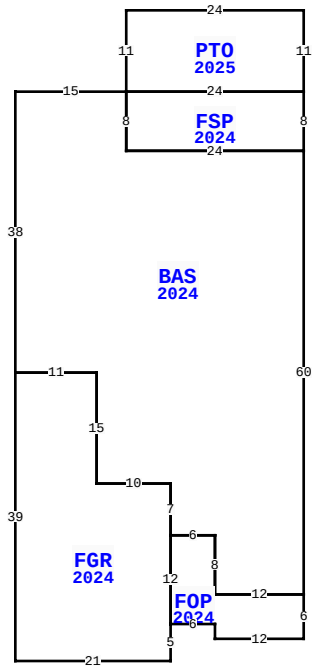


244 ETHEREAL SQ, YULEE

| | | | |
|---|---|---|---|
| BLD DATE | | LGL DATE | |
| XF DATE | | LAND DATE | 04/30/2026 MLU |
| INC DATE | | AG DATE | |

## VALUATION SUMMARY

| | | |
|---|---|---|
| VALUATION BY | | STANDARD |
| Tax Group: 4 | Tax Dist: | |
| BUILDING MARKET VALUE | | 417,159 |
| TOTAL MARKET OB/XF VALUE | | 4,609 |
| TOTAL LAND VALUE - MARKET | | 110,500 |
| TOTAL MARKET VALUE | | 532,268 |
| SOH/AGL Deduction | | 385,752 |
| ASSESSED VALUE | | 146,516 |
| TOTAL EXEMPTION VALUE | HX HB | 51,411 |
| BASE TAXABLE VALUE | | 95,105 |
| TOTAL JUST VALUE | | 532,268 |
| NCON VALUE | | 0 |
| INCOME VALUE | | |
| PREVIOUS YEAR MKT VALUE | | 529,073 |

| PERMIT NUM | DESCRIPTION | AMT | ISSUED |
|---|---|---|---|
| B240004042 | 24'7 X 11 SCREEN | 8,827 | 04/09/2024 |
| 230012537 | CO ISSUED | | 09/28/2023 |
| 22018807 | NEW CONSTR | 377,372 | 12/27/2022 |

## SALES DATA

| OFF RECORD Number | DATE | TYPE INST | Q / U | V / I | RSN CD | SALE PRICE |
|---|---|---|---|---|---|---|
| 2676/1942 | 10/27/2023 | SW | Q | I | 01 | 691,300 |

GRANTOR: PULTE HOME COMPANY LL
GRANTEE: CARNEY REVOCABLE TR

## BUILDING NOTES

## EXTRA FEATURES

| LN | OB/XF CODE | DESCRIPTION | BLD | CAP | L | W | UNITS | UT | Adj R | ADJ UNIT PRICE | ORIG COND | YEAR ON | YEAR ACTUAL | Q | % COND | OB/XF MKT VALUE | NOTES |
|---|---|---|---|---|---|---|---|---|---|---|---|---|---|---|---|---|---|
| 4 | 0911 | SCRN RM A | 0 | 100 | 11 | 24 | 264.00 | SF | 18.00 | 18.00 | 100 | 2025 | 2024 | | 97 | 4,609 | |

## BUILDING DIMENSIONS

BAS=[YR=2024;ORIG=40,0] E15 S8 E24 S60 W12 N8 W6 N7 W10 N15 W11 N38 $
FGR=[YR=2024;ORIG=40,38] E11 S15 E10 S7 S12 S5 W21 N39 $
FSP=[YR=2024;ORIG=79,0] W24 S8 E24 N8 $
FOP=[YR=2024;ORIG=79,68] W12 N8 W6 S12 E6 S2 E12 N6 $
PTO=[YR=2025;ORIG=55,-11] E24 S11 W24 N11 $
.

## LAND DESCRIPTION

TOTAL OB/XF 4,609

| LN | USE CODE | CLS | LAND USE DESCRIPTION | CAP | RD | LOC ZONE | FRONT | DEPTH | TOT LND UTS | UNIT TYPE | DT | DPTH FACT | % COND | TOT ADJ | UNIT PRICE | ADJ UNIT PRICE | LAND VALUE | OTHER ADJUSTMENTS AND NOTES | YEAR | DENSITY | DECL | FRZ | YR | CONSRV |
|---|---|---|---|---|---|---|---|---|---|---|---|---|---|---|---|---|---|---|---|---|---|---|---|---|
| 1 | 000135 | C | RES NATURAL | 100 | | PD - | E 0.00 | 0.00 | 1.00 | LT | | 1.00 | 1.00 | 1.30 | 85,000.00 | 110,500.00 | 110,500 | | | | | | | |

REVIEW DATE 05/01/2025 BY KB Total Acres: 0.00 Total Land Value: 110,500 Market: 0 Agricultural: 0 Common: 110,500 PRINTED 07/09/2026 BY SYS