PT ZACH HADDOCK GRANT
SEC 48-4N-25E IN OR 1822/756

CAST RAYMOND W JR & LAUREN J
394670 KOLARS FERRY RD
HILLIARD, FL 32046

2026

48-4N-25-0000-0001-0050

BUILDING CHARACTERISTICS

ELEMENT	CD	CONSTRUCTION
Exterior Wall	20	FACE BRICK 100
Roof Structur	03	GABLE/HIP 100
Roof Cover	03	COMP SHNGL 100
Interior Wall	05	DRYWALL 100
Interior Floo	14	CARPET 60
Interior Floo	12	HARDWOOD 40
Air Condition	03	CENTRAL 100
Heating Type	04	AIR DUCTED 100
Bedrooms		4 100
Bathrooms		3 100
Frame	02	WOOD FRAME 100
Stories	1.	1. 100
Units		0 100
BUD4 Adjustme	35	. 100
BUD8 Adjustme	04	DIST 01 100
Occupancy	00	NONE 100
Quality	04	Quality Level 04

DOR CODE 0100 SINGLE FAMILY
MAP NUM | MKT AREA 05
NEIGHBORHOOD/LOC 5001.00

AREA TYPE	TOTAL GROSS AREA	PCT OF BASE	YEAR	TOT ADJ AREA	SUBAREA MARKET VALUE
BAS	3,722	100	2000	3,722	542,800
FDG	729	60	2001	437	63,730
FDG	480	60	2003	288	42,001
FSP	180	40	2001	72	10,500
FSP	748	40	2001	299	43,605
FST	216	55	2003	119	17,354
TOTALS	6,075			4,937	719,990

MARKET ADJUSTMENTS

TYPE	MDL	EFF. AREA	TOT ADJ PTS	EFF. BASE RATE	REPL. COST NEW	AYB	EYB	ECON	FNCT		NORM	% COND
0900	01	4,937	129.1290	179.49	886,142	2000	2000	0	0	0	18.75	81.25

1 SNGL FAM 100% - 2013 Heated Area: 3722 HX Base Yr 2013

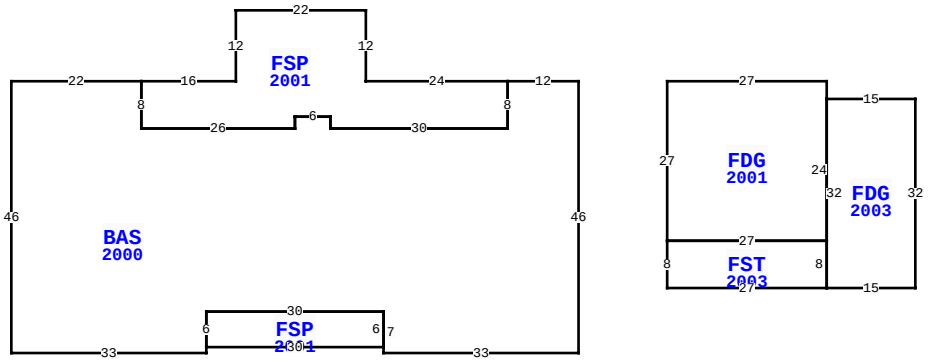

394670 KOLARS FERRY RD, HILLIARD

BLD DATE		LGL DATE	
XF DATE		LAND DATE	04/24/2025 MLU
INC DATE		AG DATE	

EXTRA FEATURES

LN	OB/XF CODE	DESCRIPTION	BLD	CAP	L	W	UNITS	UT	Adj R	ADJ UNIT PRICE	ORIG COND	YEAR ON	YEAR ACTUAL	Q	% COND	OB/XF MKT VALUE	NOTES
2	0500	FP-PRE FAB	0	100	0	0	1.00	UT	3,500.00	3,500.00	100	2000	2000	3	81	2,835	
3	0300	BOAT DCK W	0	100	0	0	1,430.00	SF	40.00	40.00	100	2002	2002	3	28	16,016	
4	0351	CARPORT MT	0	100	30	20	600.00	SF	10.00	10.00	100	2005	2005	3	21	1,260	
7	0350	CARPORT WD	0	100	14	17	238.00	SF	13.00	13.00	100	2005	2005	3	21	650	
8	0940	SHEDS/PORT	0	100	18	16	288.00	SF	30.00	30.00	100	2005	2005	3	21	1,814	
9	0350	CARPORT WD	0	100	7	14	98.00	SF	13.00	13.00	100	2005	2005	3	21	268	
10	0820	WOOD WALK	0	100	0	0	3,175.00	SF	11.75	11.75	100	2005	2005	3	40	14,923	
11	0860	POOL/SPA	0	100	0	0	1.00	UT	40,000.00	40,000.00	100	2016	2016	03	95	38,000	
12	0911	SCRN RM A	0	100	0	0	1,260.00	SF	18.00	18.00	100	2016	2016	3	65	14,742	
13	0680	POLE SHED	1	100	40	16	640.00	SF	10.00	10.00	100	2023	2022	03	93	5,952	

LAND DESCRIPTION

TOTAL OB/XF 96,460

LN	USE CODE	CLS	LAND USE DESCRIPTION	CAP	RD	LOC ZONE	FRONT	DEPTH	TOT LND UTS	UNIT TYPE	DT	DPTH FACT	% COND	TOT ADJ	UNIT PRICE	ADJ UNIT PRICE	LAND VALUE	OTHER ADJUSTMENTS AND NOTES	YEAR	DENSITY	DECL	FRZ	YR	CONSRV
1	000132	C	RES RIVER	100	0005	OR	0.00	0.00	7.48	AC		1.00	1.00	1.00	20,000.00	20,000.00	149,600							

NASSAU COUNTY PROPERTY

PAGE 1 of 1 4

VALUATION SUMMARY

VALUATION BY		STANDARD
Tax Group: 4	Tax Dist:	
BUILDING MARKET VALUE		719,990
TOTAL MARKET OB/XF VALUE		96,460
TOTAL LAND VALUE - MARKET		149,600
TOTAL MARKET VALUE		966,050
SOH/AGL Deduction		499,158
ASSESSED VALUE		466,892
TOTAL EXEMPTION VALUE	HX HB VX DX	61,411
BASE TAXABLE VALUE		405,481
TOTAL JUST VALUE		966,050
NCON VALUE		0
INCOME VALUE		
PREVIOUS YEAR MKT VALUE		958,743

PERMIT NUM	DESCRIPTION	AMT	ISSUED
22010069	REPAIR/RRF	42,070	06/30/2022
22002461	ADDITION	19,161	02/14/2022
19006069	XFOB	14,619	07/01/2019
B1632899	XFOB	32,364	08/01/2016
B1632496	SWIM POOL	66,655	06/01/2016
B1327820	ADDITION	36,508	10/01/2013

SALES DATA

OFF RECORD Number	DATE	TYPE INST	Q / U	V / I	RSN CD	SALE PRICE
1822/0756	10/25/2012	WD	Q	I	02	428,000
GRANTOR: MELLROY LAWTON R JR						
GRANTEE: CAST RAYMOND W JR &						
1638/1481	8/14/2009	QC	U	I	30	100
GRANTOR: MELLROY LAWTON R JR &						
GRANTEE: MELLROY LAWTON R JR						

BUILDING NOTES

BUILDING DIMENSIONS

BAS=[YR=2000] W12 FSP=[YR=2001] W24 N12 W22 S12 W16 S8 E26 N2 E6 S2 E30 N8 $ S8 W30 N2 W6 S2 W26 N8 W22 S46 E33
N1FSP=[YR=2001] E30 N6 W30 S6 $ N6 E30 S7 E33 N46 $ PTR= E15
FDG=[YR=2001] E27 S3 FDG=[YR=2003] E15 S32 W15
FST=[YR=2003] W27 N8 E27 S8$ N32 $ S24 W27 N27 $ W15 $.

REVIEW DATE 06/15/2023 BY KWA Total Acres: 7.48 Total Land Value: 149,600 Market: 0 Agricultural: 0 Common: 149,600 PRINTED 07/09/2026 BY SYS