LOT 27
OYSTER BAY #4 PB 6/24

KENT FAMILY TRUST/KENT ALAN L TRUSTEE
96196 BAY VIEW DRIVE
FERNANDINA BEACH, FL 32034

2026

46-3N-28-5483-0027-0000

NASSAU COUNTY PROPERTY

BUILDING CHARACTERISTICS

ELEMENT	CD	CONSTRUCTION
Exterior Wall	16	WD FR STUC 100
Roof Structur	08	IRREGULAR 100
Roof Cover	03	COMP SHNGL 100
Interior Wall	05	DRYWALL 100
Interior Floo	11	CLAY TILE 60
Interior Floo	13	LVT/LAMNT 40
Air Condition	03	CENTRAL 100
Heating Type	04	AIR DUCTED 100
Bedrooms		5 100
Bathrooms		4.5 100
Frame	02	WOOD FRAME 100
Stories	2.	2. 100
Units		0 100
Quality	04	Quality Level 04
DOR CODE	0100	SINGLE FAMILY
MAP NUM		MKT AREA 04
NEIGHBORHOOD/LOC	4024.00	

AREA TYPE	TOTAL GROSS AREA	PCT OF BASE	YEAR	TOT ADJ AREA	SUBAREA MARKET VALUE
BAS	2,654	100	1999	2,654	570,041
BAS	528	100	2012	528	113,407
FGR	750	55	2012	412	88,492
FOP	96	30	1999	29	6,229
FOP	96	30	1999	29	6,229
FOP	96	30	1999	29	6,229
FOP	104	30	1999	31	6,658
FSP	168	40	2006	67	14,391
FSP	288	40	2006	115	24,700
FSP	148	40	2016	59	12,672
TOTALS	6,154			5,059	1,086,600

MARKET ADJUSTMENTS

TYPE	MDL	EFF. AREA	TOT ADJ PTS	EFF. BASE RATE	REPL. COST NEW	AYB	EYB	ECON	FNCT		NORM	% COND
0500	11	5,059	148.7244	246.88	1,248,966	1999	1999	0	0	0	13.00	87.00

1 SFR CUST 100% - 2021 Heated Area: 4282 HX Base Yr 2021

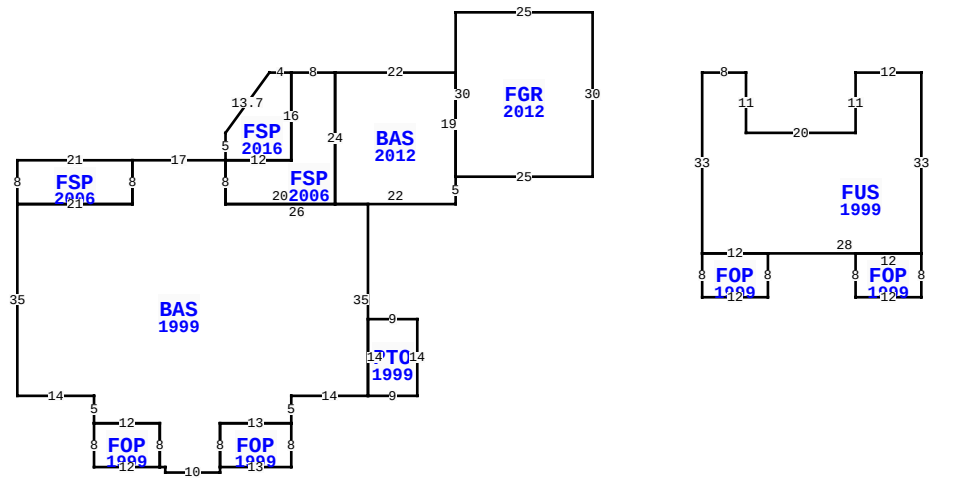

** This building has 12 Sub-Areas

96196 BAY VIEW DR, FERNANDINA BEACH

BLD DATE		LGL DATE	
XF DATE		LAND DATE	04/24/2026 MLU
INC DATE		AG DATE	

VALUATION SUMMARY

VALUATION BY		STANDARD
Tax Group: 4	Tax Dist:	
BUILDING MARKET VALUE		1,086,600
TOTAL MARKET OB/XF VALUE		50,438
TOTAL LAND VALUE - MARKET		165,000
TOTAL MARKET VALUE		1,302,038
SOH/AGL Deduction		679,584
ASSESSED VALUE		622,454
TOTAL EXEMPTION VALUE	HX HB	51,411
BASE TAXABLE VALUE		571,043
TOTAL JUST VALUE		1,302,038
NCON VALUE		0
INCOME VALUE		
PREVIOUS YEAR MKT VALUE		1,243,629

PERMIT NUM	DESCRIPTION	AMT	ISSUED
B240009783	OUTDOOR KITCHEN R	30,000	08/23/2024
B2100988	SOLAR PANELS	34,079	01/28/2021
B1804244	REPAIR FOP	2,300	05/01/2018
B1226508	REPAIR/RRF	4,800	10/01/2012
M16723	H/AC	0	12/01/2011
B25278	ADDITION	67,486	11/01/2011

SALES DATA

OFF RECORD Number	DATE	TYPE INST	Q U	V I	RSN CD	SALE PRICE
2797/1138	6/20/2025	WD	U	I	11	100
GRANTOR: KENT ALAN & JACALYN						
GRANTEE: KENT FAMILY TRUST						
2381/0204	7/30/2020	WD	Q	I	01	677,500
GRANTOR: BABICH GREGORY J & LI						
GRANTEE: KENT ALAN & JACALYN						

BUILDING NOTES

BUILDING DIMENSIONS

BAS=[YR=2012] W22 FSP=[YR=2006] W8 FSP=[YR=2016] W4 L8 D11 S5 E12 N16 $ S16 W12 BAS=[YR=1999] W17 FSP=[YR=2006] W21 S8 E21 N8 $ S8 W21 S35 E14 S5 FOP=[YR=1999] S8 E12 N8 W12 $ E12 S8E1 S1 E10 N1 FOP=[YR=1999] E13 N8 W13 S8 $ N8 E13 N5 E14 PTO=[YR=1999] E9 N14 W9 S14 $ N35 W26 N8 $ S8 E20 N24 $ S24 E22 N5 FGR=[YR=2012] E25 N30 W25 S30$ N19$ PTR= E45 FUS=[YR=1999] E8 S11 E20 N11 E12 S33 FOP=[YR=1999] S8 W12 N8 E12 $ W28 FOP=[YR=1999] S8 W12 N8 E12 $ W12 N33 $ W45 $.

EXTRA FEATURES

L N	OB/XF CODE	DESCRIPTION	BLD	CAP	L	W	UNITS	UT	Adj R	ADJ UNIT PRICE	ORIG COND	YEAR ON	YEAR ACTUAL	Q	% COND	OB/XF MKT VALUE	NOTES
1	0500	FP-PRE FAB	0	100	0	0	1.00	UT	3,500.00	3,500.00	100	1999	1999	3	80	2,800	
5	0860	POOL/SPA	0	100	0	0	1.00	UT	50,000.00	50,000.00	100	2007	2007	04	85	42,500	
7	1242	WD DECK A	0	100	30	4	120.00	SF	10.00	10.00	100	2007	2007	3	24	288	
9	0600	SUMMER KIT	0	100	0	0	1.00	UT	5,000.00	5,000.00	100	2025	2024		97	4,850	

LAND DESCRIPTION

TOTAL OB/XF 50,438

L N	USE CODE	CLS	LAND USE DESCRIPTION	CAP	R D	LOC ZONE	FRONT	DEPTH	TOT LND UTS	UNIT TYPE	D T	DPTH FACT	% COND	TOT ADJ	UNIT PRICE	ADJ UNIT PRICE	LAND VALUE	OTHER ADJUSTMENTS AND NOTES	YEAR	DENSITY	DECL	FRZ	YR	CONSRV
1	000134	C	RES POND	100		PUD	0.00	0.00	1.00	LT		1.00	1.00	1.00	165,000.00	165,000.00	165,000							

REVIEW DATE 02/20/2025 BY KBA Total Acres: 0.00 Total Land Value: 165,000 Market: 0 Agricultural: 0 Common: 165,000 PRINTED 07/09/2026 BY SYS