LOT 16
IN OR 1835/1852
OYSTER BAY #4 PB 6/24

CORNELIUS DONALD R & ANDREA M
96299 BAYVIEW DRIVE
FERNANDINA BEACH, FL 32034

2026

46-3N-28-5483-0016-0000

BUILDING CHARACTERISTICS

ELEMENT	CD	CONSTRUCTION
Exterior Wall	16	WD FR STUC 100
Roof Structur	08	IRREGULAR 100
Roof Cover	03	COMP SHNGL 100
Interior Wall	05	DRYWALL 100
Interior Floo	12	HARDWOOD 70
Interior Floo	14	CARPET 30
Air Condition	03	CENTRAL 100
Heating Type	04	AIR DUCTED 100
Bedrooms		3 100
Bathrooms		4.5 100
Frame	02	WOOD FRAME 100
Stories	2.	2. 100
Units		0 100
Quality	04	Quality Level 04

DOR CODE	0100	SINGLE FAMILY	
MAP NUM		MKT AREA	04
NEIGHBORHOOD/LOC	4024.00		

AREA TYPE	TOTAL GROSS AREA	PCT OF BASE	YEAR	TOT ADJ AREA	SUBAREA MARKET VALUE
BAL	216	15	2000	32	6,057
BAS	2,218	100	2000	2,218	419,832
FGR	754	55	2000	415	78,553
FOP	75	30	2000	22	4,164
FOP	99	30	2000	30	5,678
FOP	204	30	2000	61	11,547
FOP	267	30	2000	80	15,142
FSP	216	40	2000	86	16,279
FUS	587	100	2000	587	111,110
FUS	1,382	100	2000	1,382	261,590
TOTALS	6,237			4,924	932,033

MARKET ADJUSTMENTS

TYPE	MDL	EFF. AREA	TOT ADJ PTS	EFF. BASE RATE	REPL. COST NEW	AYB	EYB	ECON	FNCT		NORM	% COND
0500	11	4,924	128.8452	213.88	1,053,145	2000	2002	0	0	0	11.50	88.50

1 SFR CUST 100% - 2015 Heated Area: 4187 HX Base Yr 2015

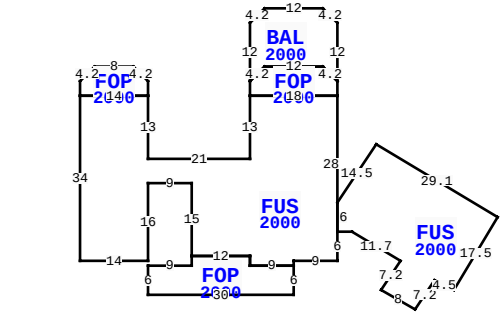

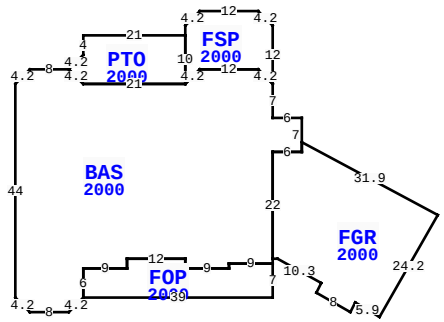

** This building has 11 Sub-Areas

96299 BAY VIEW DR, FERNANDINA BEACH

BLD DATE		LGL DATE	
XF DATE		LAND DATE	05/08/2025 MLU
INC DATE		AG DATE	

NASSAU COUNTY PROPERTY

PAGE 1 of 1 4

VALUATION SUMMARY

VALUATION BY		STANDARD
Tax Group: 4	Tax Dist:	
BUILDING MARKET VALUE		932,033
TOTAL MARKET OB/XF VALUE		5,195
TOTAL LAND VALUE - MARKET		225,000
TOTAL MARKET VALUE		1,162,228
SOH/AGL Deduction		537,862
ASSESSED VALUE		624,366
TOTAL EXEMPTION VALUE	HX HB	51,411
BASE TAXABLE VALUE		572,955
TOTAL JUST VALUE		1,162,228
NCON VALUE		0
INCOME VALUE		
PREVIOUS YEAR MKT VALUE		1,135,872

PERMIT NUM	DESCRIPTION	AMT	ISSUED
B23661	REPAIR/RRF	14,900	06/01/2010
006603	NEW CONSTR	0	02/01/2000

SALES DATA

OFF RECORD Number	DATE	TYPE INST	Q / U	V / I	RSN CD	SALE PRICE
1835/1852	1/16/2013	WD	Q	I	02	645,000
GRANTOR: GARLAND MICHAEL D & K						
GRANTEE: CORNELIUS DONALD R						
0865/0923	2/02/1999	WD	Q	V		110,000
GRANTOR: WILLIAMS DAVID J & CA						
GRANTEE: GARLAND MICHAEL D &						

BUILDING NOTES

BUILDING DIMENSIONS

FSP=[YR=2000] L3 U3 W12 D3 L3 S2 PTO=[YR=2000] W21 S4 L3 D3 D3 R3 E21 N10 $ S10 BAS=[YR=2000] W21 L3 U3 W8 L3 D3 S44 D3 R3 E8 R3 U3 FOP=[YR=2000] E39 N7 W9 S1 W9 N2 W12 S2 W9 S6 $ N6 E9 N2 E12 S2 E9 N1 E9 N1 FGR=[YR=2000] E1 D5 R9 D2 L1 D4 R7 R1 U2 R5 D3 R12 U21 U15 L28 S2 W6 S22 $ N22 E6 N7 W6 N7 L3 U3 W12 D3 L3 $ R3 U3 E12 D3 R3 N12 $ PTR= N15 FOP=[YR=2000] N6 FUS=[YR=2000] N1 E9 N6 FUS=[YR=2000] E3 R10 D6 L4 D6 D4 R7 U6 R4 R4 D2 R9 U15 U15 L25 D12 L8 S6 $ N28 FOP=[YR=2000] N3 BAL=[YR=2000] N12 U3 L3 W12 L3 D3 S12 R3 U3 E12 D3 R3 $ L3 U3 W12 D3 L3 S3 E18 $ W18 S13 W21 N13 FOP=[YR=2000] N3 L3 U3 W8 L3 D3 S3 E14 $ W14 S34 E14 N16 E9 S15 E12 S2 E9 $ W9 N2 W12

EXTRA FEATURES

LN	OB/XF CODE	DESCRIPTION	BLD	CAP	L	W	UNITS	UT	Adj R	ADJ UNIT PRICE	ORIG COND	YEAR ON	YEAR ACTUAL	Q	% COND	OB/XF MKT VALUE	NOTES
1	1123	CB 8"	0	100	45	4	180.00	SF	6.15	6.15	100	2000	2000	3	75	830	
3	0500	FP-PRE FAB	0	100	0	0	1.00	UT	3,500.00	3,500.00	100	2000	2000	3	81	2,835	
4	1076	TRELLIS A	0	100	12	20	240.00	SF	7.50	7.50	100	2002	2002	3	85	1,530	

LAND DESCRIPTION

TOTAL OB/XF 5,195

LN	USE CODE	CLS	LAND USE DESCRIPTION	CAP	RD	LOC ZONE	FRONT	DEPTH	TOT LND UTS	UNIT TYPE	DT	DPTH FACT	% COND	TOT ADJ	UNIT PRICE	ADJ UNIT PRICE	LAND VALUE	OTHER ADJUSTMENTS AND NOTES	YEAR	DENSITY	DECL	FRZ	YR	CONSRV
1	000116	C	RES MARSH	100		PUD	0.00	0.00	1.00	LT		1.00	1.00	1.00	225,000.00	225,000.00	225,000							

REVIEW DATE 01/01/2023 BY CD Total Acres: 0.00 Total Land Value: 225,000 Market: 0 Agricultural: 0 Common: 225,000 PRINTED 07/09/2026 BY SYS