LOT 17
LANCEFORD CREEK PLANTATION
PB 5/110-111

ZEMBER DAVID W & TRICIA G
96063 LANCEFORD LN
FERNANDINA BEACH, FL 32034

2026

46-3N-28-5100-0017-0000

BUILDING CHARACTERISTICS

ELEMENT	CD	CONSTRUCTION
Exterior Wall	31	HARDIE BRD 100
Roof Structur	08	IRREGULAR 100
Roof Cover	13	STAND SEAM 100
Interior Wall	05	DRYWALL 100
Interior Floo	12	HARDWOOD 100
Air Condition	03	CENTRAL 100
Heating Type	04	AIR DUCTED 100
Bedrooms		4 100
Bathrooms		3 100
Frame	02	WOOD FRAME 100
Stories	1.	1. 100
Units		1 100
Quality	03	Quality Level 03

DOR CODE 0100 SINGLE FAMILY
MAP NUM | MKT AREA 04
NEIGHBORHOOD/LOC 4080.00

AREA TYPE	TOTAL GROSS AREA	PCT OF BASE	YEAR	TOT ADJ AREA	SUBAREA MARKET VALUE
BAS	3,001	100	2025	3,001	715,228
FGR	1,007	55	2025	554	132,035
FOP	266	30	2025	80	19,066
FOP	324	30	2025	97	23,118
FOP	486	30	2025	146	34,796
FST	68	55	2025	37	8,818
FUS	675	100	2025	675	160,873
FUS	1,137	100	2025	1,137	270,981
SFB	280	80	2025	224	53,386
STP	50	10	2025	5	1,192
TOTALS	7,546			5,992	1,428,073

MARKET ADJUSTMENTS

TYPE	MDL	EFF. AREA	TOT ADJ PTS	EFF. BASE RATE	REPL. COST NEW	AYB	EYB	ECON	FNCT		NORM	% COND
0500	11	5,992	143.5735	238.33	1,428,073	2024	2024	0	0	0	0.00	100.00

1 SFR CUST 100% - 2025 Heated Area: 5037 HX Base Yr 2025

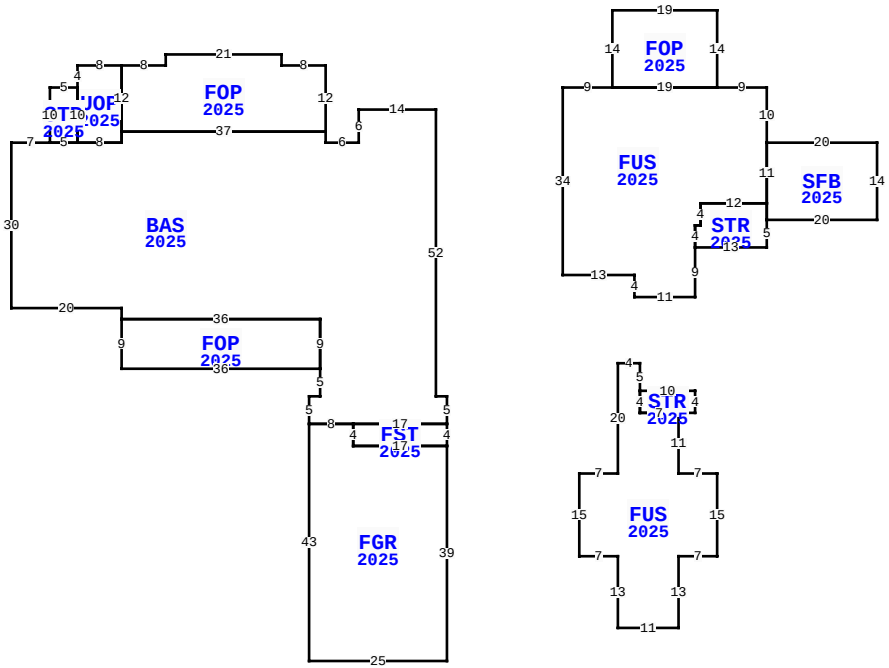

** This building has 13 Sub-Areas

96063 LANCEFORD LN, FERNANDINA BEACH

BLD DATE		LGL DATE	
XF DATE		LAND DATE	
INC DATE		AG DATE	

NASSAU COUNTY PROPERTY

PAGE 1 of 1 4

VALUATION SUMMARY

VALUATION BY		STANDARD
Tax Group: 4	Tax Dist:	
BUILDING MARKET VALUE		1,428,073
TOTAL MARKET OB/XF VALUE		10,000
TOTAL LAND VALUE - MARKET		325,000
TOTAL MARKET VALUE		1,763,073
SOH/AGL Deduction		1,475
ASSESSED VALUE		1,761,598
TOTAL EXEMPTION VALUE	HX HB	51,411
BASE TAXABLE VALUE		1,710,187
TOTAL JUST VALUE		1,763,073
NCON VALUE		0
INCOME VALUE		
PREVIOUS YEAR MKT VALUE		1,715,285

PERMIT NUM	DESCRIPTION	AMT	ISSUED
CO240013692	NEW S/F/R. 6667 T	899,494	12/11/2024
B230011724	20X20 MTL CPT	2,600	09/14/2023
230007215	HTD4791 G1061 P81	899,494	06/05/2023

SALES DATA

OFF RECORD Number	DATE	TYPE INST	Q U	V I	RSN CD	SALE PRICE
2551/1045	3/31/2022	WD	Q	V	01	372,500
GRANTOR: TOLBERT KIRK L &						
GRANTEE: ZEMBER DAVID WALTER						
2212/1882	7/24/2018	WD	Q	I	02	250,000
GRANTOR: CURY NEAL G JR & ROMA						
GRANTEE: TOLBERT KIRK L & ME						

BUILDING NOTES

EXTRA FEATURES

L N	OB/XF CODE	DESCRIPTION	BLD	CAP	L	W	UNITS	UT	Adj R	ADJ UNIT PRICE	ORIG COND	YEAR ON	YEAR ACTUAL	Q	% COND	OB/XF MKT VALUE	NOTES
2	0502	FP-CUSTOM	0	100	0	0	1.00	UT	10,000.00	10,000.00	100	2025	2024		100	10,000	

BUILDING DIMENSIONS

BAS=[YR=2025;ORIG=10,10] E7 E5 E8 N2 E37 S2 E6 N6 E14 S52 E2 S5 W17 W8 N5 E2 N5 N9 W36 N2 W20 N30 $
FOP=[YR=2025;ORIG=67,8] W37 N12 E8 N2 E21 S2 E8 S12 $
UOP=[YR=2025;ORIG=30,-4] W8 S4 S10 E8 N2 N12 $
STP=[YR=2025;ORIG=22,0] W5 S10 E5 N10 $
FST=[YR=2025;ORIG=72,61] E17 S4 W17 N4 $
FGR=[YR=2025;ORIG=64,61] E8 S4 E17 S39 W25 N43 $
FOP=[YR=2025;ORIG=30,42] E36 S9 W36 N9 $
FUS=[YR=2025;ORIG=110,0] E9 E19 E9 S10 S11 W12 S4 W1 S4 S9 W11 N4 W13 N34 $
FOP=[YR=2025;ORIG=119,0] E19 N14 W19 S14 $
STR=[YR=2025;ORIG=147,21] W12 S4 W1 S4 E13 N5 N3 $

LAND DESCRIPTION

TOTAL OB/XF 10,000

L N	USE CODE	CLS	LAND USE DESCRIPTION	CAP	R D	LOC ZONE	FRONT	DEPTH	TOT LND UTS	UNIT TYPE	D T	DPTH FACT	% COND	TOT ADJ	UNIT PRICE	ADJ UNIT PRICE	LAND VALUE	OTHER ADJUSTMENTS AND NOTES	YEAR	DENSITY	DECL	FRZ	YR	CONSRV
1	000131	C	RES CREEK	100		RSF-1	0.00	0.00	1.00	LT		1.00	1.00	1.00	325,000.00	325,000.00	325,000							

REVIEW DATE 02/28/2025 BY NW Total Acres: 0.00 Total Land Value: 325,000 Market: 0 Agricultural: 0 Common: 325,000 PRINTED 07/09/2026 BY SYS