LOT 9
IN OR 1216/301
LANCEFORD CREEK PLANTATION

BAZAR WAYNE V & SHEILA W
96257 HEATH POINT LANE
FERNANDINA BEACH, FL 32034

2026

46-3N-28-5100-0009-0000

NASSAU COUNTY PROPERTY

BUILDING CHARACTERISTICS

ELEMENT	CD	CONSTRUCTION
Exterior Wall	20	FACE BRICK 100
Roof Structur	03	GABLE/HIP 100
Roof Cover	03	COMP SHNGL 100
Interior Wall	05	DRYWALL 100
Interior Floo	11	CLAY TILE 70
Interior Floo	14	CARPET 30
Air Condition	03	CENTRAL 100
Heating Type	04	AIR DUCTED 100
Bedrooms		3 100
Bathrooms		4.5 100
Frame	02	WOOD FRAME 100
Stories	2.	2. 100
Units		0 100
Quality	04	Quality Level 04
DOR CODE	0100	SINGLE FAMILY
MAP NUM		MKT AREA 04
NEIGHBORHOOD/LOC	4080.00	

AREA TYPE	TOTAL GROSS AREA	PCT OF BASE	YEAR	TOT ADJ AREA	SUBAREA MARKET VALUE
BAS	3,853	100	2005	3,853	791,514
FGR	1,527	55	2005	840	172,559
FOP	36	30	2005	11	2,259
FOP	49	30	2005	15	3,081
FOP	141	30	2005	42	8,628
FOP	406	30	2005	122	25,062
FSP	928	40	2005	371	76,214
FUS	1,160	100	2005	1,160	238,297
UOP	105	20	2005	21	4,314
UUS	261	50	2005	130	26,705
TOTALS	8,466			6,565	1,348,635

MARKET ADJUSTMENTS

TYPE	MDL	EFF. AREA	TOT ADJ PTS	EFF. BASE RATE	REPL. COST NEW	AYB	EYB	ECON	FNCT		NORM	% COND
0500	11	6,565	145.5894	241.68	1,586,629	2005	2005	0	0	0	15.00	85.00

1 SFR CUST 100% - 2006 Heated Area: 5013 HX Base Yr 2006

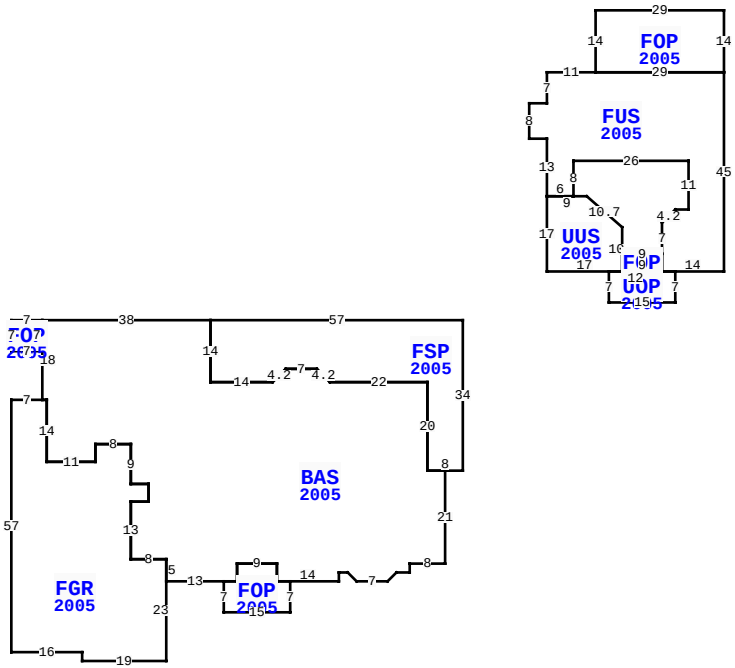

96257 HEATH POINT LN, FERNANDINA BEACH

BLD DATE		LGL DATE	
XF DATE		LAND DATE	
INC DATE		AG DATE	

NASSAU COUNTY PROPERTY — VALUATION SUMMARY

VALUATION BY		STANDARD
Tax Group: 4	Tax Dist:	
BUILDING MARKET VALUE		1,348,635
TOTAL MARKET OB/XF VALUE		83,178
TOTAL LAND VALUE - MARKET		325,000
TOTAL MARKET VALUE		1,756,813
SOH/AGL Deduction		752,880
ASSESSED VALUE		1,003,933
TOTAL EXEMPTION VALUE	HX HB	51,411
BASE TAXABLE VALUE		952,522
TOTAL JUST VALUE		1,756,813
NCON VALUE		0
INCOME VALUE		
PREVIOUS YEAR MKT VALUE		1,719,173

PERMIT NUM	DESCRIPTION	AMT	ISSUED
B16261	ADDITION	12,536	09/01/2005
B0414028	NEW CONSTR	0	04/01/2005
M09555	MECH OTHER	0	04/01/2005
B14638	SWIM POOL	18,000	02/01/2005
E0413940	ELEC OTHER	0	12/01/2004
P0408810	OTHER	0	12/01/2004

SALES DATA

OFF RECORD Number	DATE	TYPE INST	Q / U	V / I	RSN CD	SALE PRICE
1216/0301	3/18/2004	WD	Q	V		295,000
GRANTOR: MYERS JOHN E						
GRANTEE: BAZAR WAYNE V & SHE						
0507/1094	1/09/1987	WD	Q	V		33,500
GRANTOR: THIRD MILLENNIUM INC						
GRANTEE: MYERS JOHN E						

BUILDING NOTES

BUILDING DIMENSIONS

FSP=[YR=2005] W57 BAS=[YR=2005] W38 FOP=[YR=2005] W7 S7 E7 N7$ S18 FGR=[YR=2005] W7 S57 E16 S2 E19 N23 W8 N13 E4 N4 W4 N9 W8 S4 W11 N14 W1$ E1 S14 E11 N4 E8 S9 E4 S4 W4 S13 E8 S5 E13 FOP=[YR=2005] S7 E15 N7 W3 N4 W9 S4 W3$ E3 N4 E9 S4 E14 N2 E2 D2 R2 E7 R2 U2 E3 N2 E8 N21 W4 N20 W22 U3 L3 W7 L3 D3 W14 N14$ S14 E14 U3 R3 E7 D3 R3 E22 S20 E8 N34$ PTR= N70 E30 FOP=[YR=2005] S14 FUS=[YR=2005] W11 S7 W4 S8 E4 S13 UUS=[YR=2005] S17 E17 N10 U7 L8 W9$E6 N8 E26 S11 W3 L3 D3 S7 FOP=[YR=2005] W9 S4 E9 N4$ S4 UOP=[YR=2005] W12 S7 E15 N7 W3$ E14 N45 W29$ E29 N14 W29$ W30 S70$.

EXTRA FEATURES

LN	OB/XF CODE	DESCRIPTION	BLD	CAP	L	W	UNITS	UT	Adj R	ADJ UNIT PRICE	ORIG COND	YEAR ON	YEAR ACTUAL	Q	% COND	OB/XF MKT VALUE	NOTES
3	0920	CWALL-WD/M	0	100	0	0	190.00	LF	390.00	390.00	100	2005	2005	3	21	15,561	
5	0504	FP-ELECTRI	0	100	0	0	2.00	UT	2,000.00	2,000.00	100	2005	2005	3	87	3,480	
6	0350	CARPORT WD	0	100	16	21	320.00	SF	13.00	13.00	100	2005	2005	3	21	874	
7	0300	BOAT DCK W	0	100	0	0	984.00	SF	40.00	40.00	100	2005	2005	3	32	12,595	
8	0311	WD GANG WY	0	100	0	0	18.00	SF	45.00	45.00	100	2005	2005	3	21	170	
9	0322	BOAT LFT L	0	100	0	0	1.00	UT	1,500.00	1,500.00	100	2005	2005	3	21	315	
10	0317	DCK PLNG W	0	100	0	0	6.00	UT	1,000.00	1,000.00	100	2005	2005	3	21	1,260	
11	0303	FLT DOCK W	0	100	20	10	200.00	SF	26.00	26.00	100	2005	2005	3	32	1,664	
12	0860	POOL/SPA	0	100	0	0	1.00	UT	50,000.00	50,000.00	100	2005	2005	04	85	42,500	
13	0911	SCRN RM A	0	100	0	0	1,259.00	SF	18.00	18.00	100	2005	2005	3	21	4,759	

LAND DESCRIPTION

TOTAL OB/XF 83,178

LN	USE CODE	CLS	LAND USE DESCRIPTION	CAP	RD	LOC ZONE	FRONT	DEPTH	TOT LND UTS	UNIT TYPE	DT	DPTH FACT	% COND	TOT ADJ	UNIT PRICE	ADJ UNIT PRICE	LAND VALUE	OTHER ADJUSTMENTS AND NOTES	YEAR	DENSITY	DECL	FRZ	YR	CONSRV
1	000131	C	RES CREEK	100		RSF-1	0.00	0.00	1.00	LT		1.00	1.00	1.00	325,000.00	325,000.00	325,000							

REVIEW DATE 01/01/2023 BY CD Total Acres: 0.00 Total Land Value: 325,000 Market: 0 Agricultural: 0 Common: 325,000 PRINTED 07/09/2026 BY SYS