PT OF N1/2 OF SEC 46
UNSURVEYED MARSHLANDS PAR 5 &
PAR 13

NASSAU TRUST LLC
39 SEA MARSH RD
FERNANDINA BEACH, FL 32034

2026

46-2N-28-0000-0005-0000

BUILDING CHARACTERISTICS

ELEMENT	CD	CONSTRUCTION
Exterior Wall	10	ABOVE AVG 70
Exterior Wall	14	WD SHINGLE 30
Roof Structur	04	WOOD TRUSS 100
Roof Cover	12	MODULAR MT 100
Interior Wall	06	CUST PANEL 70
Interior Wall	05	DRYWALL 30
Interior Floo	09	PINE WOOD 80
Interior Floo	15	HARDTILE 20
Ceiling	03	PART.FIN. 100
Air Condition	03	CENTRAL 100
Heating Type	04	AIR DUCTED 100
Fixtures		30 100
Frame	02	WOOD FRAME 100
Story Height		8 100
RMS		8 100
Stories	2.	2. 100
Units		0 100
BUD8 Adjustme	04	DIST 01 100
Occupancy / Quality	00 / 03	NONE 100 / Quality Level 03
DOR CODE	2100	RESTAURANTS/CAFE
MAP NUM		MKT AREA 04
NEIGHBORHOOD/LOC	4002.00	

AREA TYPE	TOTAL GROSS AREA	PCT OF BASE	YEAR	TOT ADJ AREA	SUBAREA MARKET VALUE
BAL	162	15	2008	24	1,424
BAS	3,525	100	1993	3,525	209,226
BAS	972	100	1997	972	57,693
BAS	486	100	2007	486	28,846
CAN	120	30	1994	36	2,137
CAN	432	30	1994	130	7,716
CAN	244	30	1997	73	4,333
CAN	270	30	1997	81	4,808
DCK	147	10	1997	15	890
FDU	120	60	1998	72	4,273
TOTALS	7,594			6,352	377,021

MARKET ADJUSTMENTS

TYPE	MDL	EFF. AREA	TOT ADJ PTS	EFF. BASE RATE	REPL. COST NEW	AYB	EYB	ECON	FNCT		NORM	% COND
2101	04	6,352	102.1716	182.63	1,160,066	1982	1982	0	0	0	67.50	32.50

1 RSTARANT 1 0% - 0 Heated Area: 5851 HX Base Yr

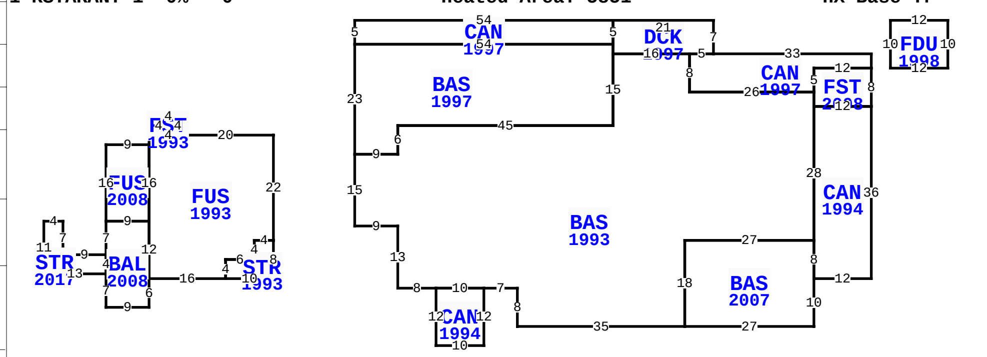

** This building has 16 Sub-Areas

96106 WADES PL, FERNANDINA BEACH

BLD DATE		LGL DATE	
XF DATE		LAND DATE	04/16/2026 DC
INC DATE		AG DATE	

VALUATION SUMMARY

VALUATION BY	STANDARD
Tax Group: 7	Tax Dist:
BUILDING MARKET VALUE	523,434
TOTAL MARKET OB/XF VALUE	69,647
TOTAL LAND VALUE - MARKET	363,681
TOTAL MARKET VALUE	956,762
SOH/AGL Deduction	116,409
ASSESSED VALUE	840,353
TOTAL EXEMPTION VALUE	0
BASE TAXABLE VALUE	840,353
TOTAL JUST VALUE	956,762
NCON VALUE	0
INCOME VALUE	
PREVIOUS YEAR MKT VALUE	1,106,528

BLDG #3 @ 96108
BLDG #2 IS DOWN UNDER OFFICE & STORAGE ON THE 1ST
DOWN UNDER RESTAURANT _ BLDG #1

PERMIT NUM	DESCRIPTION	AMT	ISSUED
B1633139	REMODEL-KIT/BATH	208,821	09/01/2016
B25881	DEMOLITION	200	04/01/2012
B011178	NEW CONSTR	18,000	02/01/2001
0071178	DEMOLITION	0	05/01/2000
984991	REMODEL	10,450	05/01/1998
96 2948	ADDITION	28,290	07/16/1996

SALES DATA

OFF RECORD Number	DATE	TYPE INST	Q/U	V/I	RSN CD	SALE PRICE
2006/1387	10/02/2015	WD	U	I	38	324,600
GRANTOR: LESUEUR-RICHMOND SLAT						
GRANTEE: NASSAU TRUST LLC						
1642/1815	10/05/2009	WD	Q	I	01	625,000
GRANTOR: MCCARTHY FAMILY LIMIT						
GRANTEE: LESUEUR-RICHMOND SL						

BUILDING NOTES

BUILDING DIMENSIONS

BAS=[YR=1993;ORIG=-54,28] S15 E9 S13 E8 E10 E7 S8 E35 N18 E27 N28 N3 W26 N8 W16 S15 W45 S6 W9 $
BAS=[YR=1997;ORIG=-54,5] S23 E9 N6 E45 N15 N2 W54 $
FUS=[YR=1993;ORIG=-71,24] W20 W4 W2 S2 S16 S12 E16 N4 E6 N4 E4 N22 $
BAS=[YR=2007;ORIG=15,64] E27 N10 N8 W27 S18 $
CAN=[YR=1994;ORIG=42,54] E12 N36 W12 S28 S8 $
CAN=[YR=1997;ORIG=0,0] W54 S5 E54 N5 $
CAN=[YR=1997;ORIG=54,10] N3 W33 W5 S8 E26 N5 E12 $
BAL=[YR=2008;ORIG=-106,42] S7 S4 S7 E9 N6 N12 W9 $
DCK=[YR=1997;ORIG=21,7] N7 W21 S5 S2 E16 E5 $
FUS=[YR=2008;ORIG=-97,26] W9 S16 E9 N16 $

EXTRA FEATURES

LN	OB/XF CODE	DESCRIPTION	BLD	CAP	L	W	UNITS	UT	Adj R	ADJ UNIT PRICE	ORIG COND	YEAR ON	YEAR ACTUAL	Q	% COND	OB/XF MKT VALUE	NOTES
1	0812	CONCRETE C	0	0	0	0	3,458.00	SF	2.00	2.00	100	1980	1980	3	29	2,006	
2	0812	CONCRETE C	0	0	0	0	1,373.00	SF	4.00	4.00	100	1988	1988	3	49.5	2,719	
3	0971	ST LGHT OV	0	0	0	0	3.00	UT	1,555.00	1,555.00	100	1996	1996	3	36	1,679	
4	1242	WD DECK A	0	0	0	0	144.00	SF	10.00	10.00	100	1996	1996	3	20	288	
5	0443	STK FNC 6'	0	0	0	0	78.00	LF	10.00	10.00	100	1996	1996	3	20	156	
6	0464	FNC GT 10'	0	0	0	0	2.00	UT	280.00	280.00	100	1998	1998	3	39	218	
7	0142	BAR TOP A	0	0	0	0	22.00	LF	165.00	165.00	100	1998	1998	3	20	726	
8	1242	WD DECK A	0	0	12	8	96.00	SF	10.00	10.00	100	1998	1998	3	20	192	
9	1242	WD DECK A	0	0	16	5	80.00	SF	10.00	10.00	100	1998	1998	3	20	160	
10	4950	BOLLARD	0	0	0	0	6.00	UT	100.00	100.00	100	1998	1998	3	100	600	

TOTAL OB/XF 8,744

LAND DESCRIPTION

LN	USE CODE	CLS	LAND USE DESCRIPTION	CAP	RD	LOC ZONE	FRONT	DEPTH	TOT LND UTS	UNIT TYPE	DT	DPTH FACT	% COND	TOT ADJ	UNIT PRICE	ADJ UNIT PRICE	LAND VALUE	OTHER ADJUSTMENTS AND NOTES	YEAR	DENSITY	DECL	FRZ	YR	CONSRV
1	002100	C	RESTAURANT	0		CG	90.00	400.00	55,950.00	SF		1.00	1.00	0.50	13.00	6.50	363,675							
2	009615	C	SLOUGH-MAS	0		CG	0.00	0.00	0.23	AC		1.00	1.00	1.00	25.00	25.00	6							

REVIEW DATE 04/18/2024 BY KWA Total Acres: 0.23 Total Land Value: 363,681 Market: 0 Agricultural: 0 Common: 363,681 PRINTED 07/09/2026 BY SYS

PT OF N1/2 OF SEC 46
UNSURVEYED MARSHLANDS PAR 5 & PAR 13

NASSAU TRUST LLC
39 SEA MARSH RD
FERNANDINA BEACH, FL 32034

2026

46-2N-28-0000-0005-0000

NASSAU COUNTY PROPERTY

BUILDING CHARACTERISTICS

ELEMENT	CD	CONSTRUCTION
Exterior Wall	14	WD SHINGLE 100
Roof Structur	04	WOOD TRUSS 100
Roof Cover	12	MODULAR MT 100
Interior Wall	05	DRYWALL 100
Interior Floo	03	CONC FINSH 50
Interior Floo	14	CARPET 50
Ceiling	02	F.NOT SUS 100
Air Condition	03	CENTRAL 100
Heating Type	04	AIR DUCTED 100
Fixtures		15 100
Frame	02	WOOD FRAME 100
Story Height		8 100
RMS		13 100
Stories	2.	2. 100
Units		0 100
BUD8 Adjustme	04	DIST 01 100
Occupancy	00	NONE 100
Quality	02	Quality Level 02
DOR CODE	2100	RESTAURANTS/CAFE
MAP NUM		MKT AREA 04
NEIGHBORHOOD/LOC	4002.00	

AREA TYPE	TOTAL GROSS AREA	PCT OF BASE	YEAR	TOT ADJ AREA	SUBAREA MARKET VALUE
APT	1,200	100	1993	1,200	54,752
BAL	260	15	1993	39	1,780
BAL	198	15	1994	30	1,369
BAS	1,200	100	1993	1,200	54,752
CAN	598	30	1994	179	8,167
FST	220	50	2007	110	5,019
STR	30	10	1993	3	137
STR	57	10	1993	6	274
TOTALS	3,763			2,767	126,249

MARKET ADJUSTMENTS

TYPE	MDL	EFF. AREA	TOT ADJ PTS	EFF. BASE RATE	REPL. COST NEW	AYB	EYB	ECON	FNCT		NORM	% COND
1701	04	2,767	80.4492	120.07	332,234	1984	1984	0	0	0	62.00	38.00

3 OFFICE 0% - 0 Heated Area: 2400 HX Base Yr

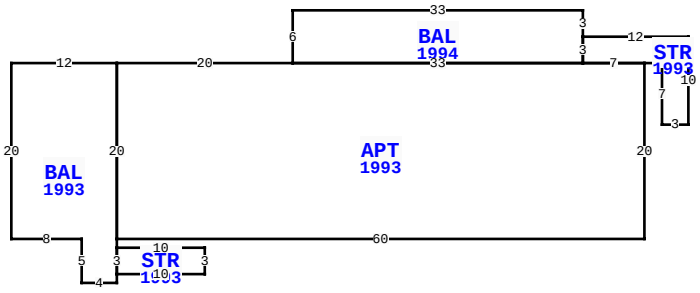

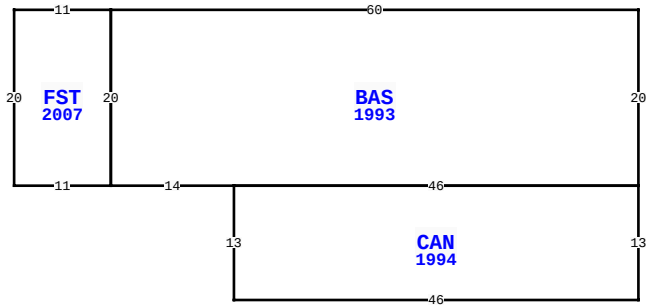

96106 WADES PL, FERNANDINA BEACH

BLD DATE		LGL DATE	
XF DATE		LAND DATE	04/16/2026 DC
INC DATE		AG DATE	

VALUATION SUMMARY

VALUATION BY	STANDARD
Tax Group: 7	Tax Dist:
BUILDING MARKET VALUE	523,434
TOTAL MARKET OB/XF VALUE	69,647
TOTAL LAND VALUE - MARKET	363,681
TOTAL MARKET VALUE	956,762
SOH/AGL Deduction	116,409
ASSESSED VALUE	840,353
TOTAL EXEMPTION VALUE	0
BASE TAXABLE VALUE	840,353
TOTAL JUST VALUE	956,762
NCON VALUE	0
INCOME VALUE	
PREVIOUS YEAR MKT VALUE	1,106,528

PERMIT NUM	DESCRIPTION	AMT	ISSUED
0570	ADDITION	5,428	10/01/1993
8179	CHNGE SRVC	600	05/18/1992
6475	XFOB	7,488	05/17/1990

SALES DATA

OFF RECORD Number	DATE	TYPE INST	Q / U	V / I	RSN CD	SALE PRICE
2006/1387	10/02/2015	WD	U	I	38	324,600
GRANTOR: LESUEUR-RICHMOND SLAT						
GRANTEE: NASSAU TRUST LLC						
1642/1815	10/05/2009	WD	Q	I	01	625,000
GRANTOR: MCCARTHY FAMILY LIMIT						
GRANTEE: LESUEUR-RICHMOND SL						

BUILDING NOTES

BUILDING DIMENSIONS

BAS=[YR=1993;ORIG=0,0] W60 S20 E14 E46 N20 $
APT=[YR=1993;ORIG=-60,-35] E20 E33 E7 S20 W60 N20 $
CAN=[YR=1994;ORIG=-46,20] S13 E46 N13 W46 $
BAL=[YR=1993;ORIG=-72,-35] E12 S20 S1 S3 S1 W4 N5 W8 N20 $
FST=[YR=2007;ORIG=-60,0] W11 S20 E11 N20 $
BAL=[YR=1994;ORIG=-40,-35] N6 E33 S3 S3 W33 $
STR=[YR=1993;ORIG=-7,-38] E12 S10 W3 N7 W2 W7 N3 $
STR=[YR=1993;ORIG=-60,-14] E10 S3 W10 N3 $
.

EXTRA FEATURES

LN	OB/XF CODE	DESCRIPTION	BLD	CAP	L	W	UNITS	UT	Adj R	ADJ UNIT PRICE	ORIG COND	YEAR ON	YEAR ACTUAL	Q	% COND	OB/XF MKT VALUE	NOTES
11	0143	BAR TOP G	0	0	29	0	29.00	LF	315.00	315.00	100	1981	1981	3	20	1,827	
12	0803	ASPHALT C	0	0	0	0	3,388.00	SF	0.20	0.20	100	1999	1999	3	50	339	
13	0310	AL GANG WY	0	0	24	0	24.00	LF	115.00	115.00	100	1999	1999	3	20	552	
14	0317	DCK PLNG W	0	0	0	0	5.00	UT	1,000.00	1,000.00	100	1999	1999	3	20	1,000	
15	0306	BOAT RAMP	0	0	0	0	1.00	UT	3,000.00	3,000.00	100	1999	1999	3	100	3,000	
16	0978	SECURTY LT	0	0	0	0	3.00	UT	450.00	450.00	100	2000	2000	3	45	608	
17	0825	BRICK	0	0	0	0	1,048.00	SF	6.25	6.25	100	1990	1990	3	84	5,502	
18	0940	SHEDS/PORT	0	0	20	8	160.00	SF	30.00	30.00	100	2000	2000	3	20	960	
19	0418	EXHST FAN	0	0	0	0	2.00	UT	400.00	400.00	100	2000	2000	3	20	160	
20	0855	CONC PAVER	0	0	0	0	721.00	SF	10.00	10.00	100	2010	2010	3	89	6,417	

TOTAL OB/XF 20,365

LAND DESCRIPTION

LN	USE CODE	CLS	LAND USE DESCRIPTION	CAP	RD	LOC ZONE	FRONT	DEPTH	TOT LND UTS	UNIT TYPE	DT	DPTH FACT	% COND	TOT ADJ	UNIT PRICE	ADJ UNIT PRICE	LAND VALUE	OTHER ADJUSTMENTS AND NOTES	YEAR	DENSITY	DECL	FRZ	YR	CONSRV

REVIEW DATE 04/18/2024 BY KWA Total Acres: 0.23 Total Land Value: 363,681 Market: 0 Agricultural: 0 Common: 363,681 PRINTED 07/09/2026 BY SYS

PT OF N1/2 OF SEC 46
UNSURVEYED MARSHLANDS PAR 5 & PAR 13

NASSAU TRUST LLC
39 SEA MARSH RD
FERNANDINA BEACH, FL 32034

2026

46-2N-28-0000-0005-0000

NASSAU COUNTY PROPERTY

BUILDING CHARACTERISTICS

ELEMENT	CD	CONSTRUCTION
Exterior Wall	29	NONE 100
Roof Structur	04	WOOD TRUSS 100
Roof Cover	12	MODULAR MT 100
Interior Wall	07	NONE 100
Interior Floo	03	CONC FINSH 100
Ceiling	04	NONE 100
Air Condition	01	NONE 100
Heating Type	01	NONE 100
Plumbing		0 100
Frame	02	WOOD FRAME 100
Story Height		10 100
RMS		1 100
Stories	1.	1. 100
Class	00	. 100
Units		0 100
Occupancy	00	NONE 100
Quality	03	Quality Level 03
DOR CODE	2100	RESTAURANTS/CAFE
MAP NUM		MKT AREA 04
NEIGHBORHOOD/LOC	4002.00	

AREA TYPE	TOTAL GROSS AREA	PCT OF BASE	YEAR	TOT ADJ AREA	SUBAREA MARKET VALUE
BAS	1,600	100	2007	1,600	20,164
TOTALS	1,600			1,600	20,164

MARKET ADJUSTMENTS

TYPE	MDL	EFF. AREA	TOT ADJ PTS	EFF. BASE RATE	REPL. COST NEW	AYB	EYB	ECON	FNCT		NORM	% COND
4803	06	1,600	39.6060	18.81	30,096	2000	2000	0	0	0	33.00	67.00

4 STOR WAREH 0% - 0 Heated Area: 1600 HX Base Yr

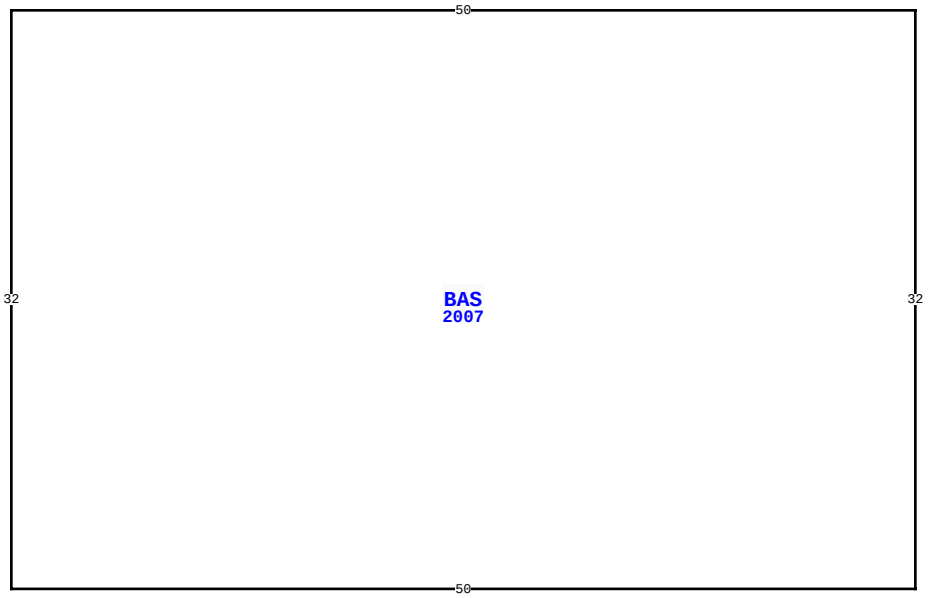

96106 WADES PL, FERNANDINA BEACH

BLD DATE		LGL DATE	
XF DATE		LAND DATE	04/16/2026 DC
INC DATE		AG DATE	

VALUATION SUMMARY

VALUATION BY	STANDARD
Tax Group: 7	Tax Dist:
BUILDING MARKET VALUE	523,434
TOTAL MARKET OB/XF VALUE	69,647
TOTAL LAND VALUE - MARKET	363,681
TOTAL MARKET VALUE	956,762
SOH/AGL Deduction	116,409
ASSESSED VALUE	840,353
TOTAL EXEMPTION VALUE	0
BASE TAXABLE VALUE	840,353
TOTAL JUST VALUE	956,762
NCON VALUE	0
INCOME VALUE	
PREVIOUS YEAR MKT VALUE	1,106,528

PERMIT NUM	DESCRIPTION	AMT	ISSUED

SALES DATA

OFF RECORD Number	DATE	TYPE INST	Q / U	V / I	RSN CD	SALE PRICE
2006/1387	10/02/2015	WD	U	I	38	324,600
GRANTOR: LESUEUR-RICHMOND SLAT						
GRANTEE: NASSAU TRUST LLC						
1642/1815	10/05/2009	WD	Q	I	01	625,000
GRANTOR: MCCARTHY FAMILY LIMIT						
GRANTEE: LESUEUR-RICHMOND SL						

BUILDING NOTES

BUILDING DIMENSIONS

BAS=[YR=2007] W50S32E50N32$.

EXTRA FEATURES

LN	OB/XF CODE	DESCRIPTION	BLD	CAP	L	W	UNITS	UT	Adj R	ADJ UNIT PRICE	ORIG COND	YEAR ON	YEAR ACTUAL	Q	% COND	OB/XF MKT VALUE	NOTES
21	0446	BOX FNC 6'	0	0	0	0	16.00	LF	20.00	20.00	100	2015	2015	3	60	192	
22	0446	BOX FNC 6'	0	0	0	0	30.00	LF	20.00	20.00	100	2017	2017	3	70	420	
23	0964	HALON SYST	0	0	12	4	48.00	SF	50.00	50.00	100	2017	2017	3	95	2,280	
24	0964	HALON SYST	0	0	12	4	48.00	SF	50.00	50.00	100	2017	2017	3	95	2,280	
25	0810	CONCRETE A	0	0	0	0	93.00	SF	6.50	6.50	100	2017	2017	3	95	574	
26	0303	FLT DOCK W	0	0	12	9	108.00	SF	26.00	26.00	100	2017	2017	3	78	2,190	
27	0303	FLT DOCK W	0	0	80	8	640.00	SF	26.00	26.00	100	2017	2017	3	78	12,979	
28	1242	WD DECK A	0	0	0	0	2,755.00	SF	10.00	10.00	100	2017	2017	3	70	19,285	
29	0443	STK FNC 6'	0	0	0	0	52.00	LF	10.00	10.00	100	2016	2016	3	65	338	

LAND DESCRIPTION

TOTAL OB/XF 40,538

LN	USE CODE	CLS	LAND USE DESCRIPTION	CAP	RD	LOC ZONE	FRONT	DEPTH	TOT LND UTS	UNIT TYPE	DT	DPTH FACT	% COND	TOT ADJ	UNIT PRICE	ADJ UNIT PRICE	LAND VALUE	OTHER ADJUSTMENTS AND NOTES	YEAR	DENSITY	DECL	FRZ	YR	CONSRV

REVIEW DATE 04/18/2024 BY KWA Total Acres: 0.23 Total Land Value: 363,681 Market: 0 Agricultural: 0 Common: 363,681 PRINTED 07/09/2026 BY SYS