LOTS 47 & 48
CLEAR LAKE ESTATES UNIT 2
PBK 8/195

HANLON WILLIAM F IV/HANLON WILLIAM FRANCIS III & M
53748 CARRINGTON DR
CALLAHAN, FL 32011

2026

46-2N-25-0240-0047-0000

NASSAU COUNTY PROPERTY

BUILDING CHARACTERISTICS

ELEMENT	CD	CONSTRUCTION
Exterior Wall	20	FACE BRICK 100
Roof Structur	03	GABLE/HIP 100
Roof Cover	03	COMP SHNGL 100
Interior Wall	05	DRYWALL 100
Interior Floo	13	LVT/LAMNT 70
Interior Floo	14	CARPET 30
Air Condition	03	CENTRAL 100
Heating Type	04	AIR DUCTED 100
Bedrooms		4 100
Bathrooms		3 100
Frame	02	WOOD FRAME 100
Stories	1.	1. 100
Units		0 100
Occupancy	00	NONE 100
Quality	04	Quality Level 04

DOR CODE 0100 SINGLE FAMILY
MAP NUM | MKT AREA 08
NEIGHBORHOOD/LOC 8015.100

AREA TYPE	TOTAL GROSS AREA	PCT OF BASE	YEAR	TOT ADJ AREA	SUBAREA MARKET VALUE
BAS	2,452	100	2022	2,452	347,588
FCP	374	25	2022	94	13,325
FDG	918	60	2022	551	78,108
FEP	255	80	2022	204	28,918
FGR	770	55	2022	424	60,105
FOP	210	30	2022	63	8,930
TOTALS	4,979			3,788	536,976

MARKET ADJUSTMENTS

TYPE	MDL	EFF. AREA	TOT ADJ PTS	EFF. BASE RATE	REPL. COST NEW	AYB	EYB	ECON	FNCT		NORM	% COND
0900	01	3,788	104.3280	145.02	549,336	2022	2022	0	0	0	2.25	97.75

1 SNGL FAM 100% - 2024 Heated Area: 2452 HX Base Yr 2024

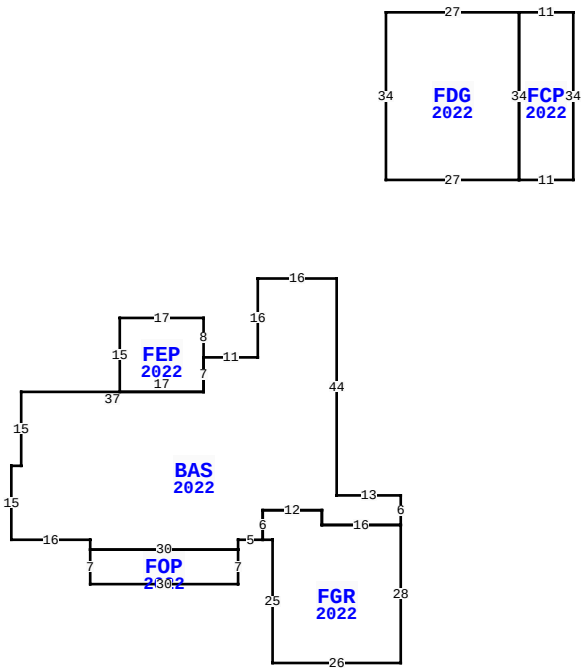

53748 CARRINGTON DR, CALLAHAN

BLD DATE		LGL DATE	
XF DATE		LAND DATE	05/04/2026 MLU
INC DATE		AG DATE	

VALUATION SUMMARY

VALUATION BY		STANDARD
Tax Group: 6	Tax Dist:	
BUILDING MARKET VALUE		536,976
TOTAL MARKET OB/XF VALUE		50,000
TOTAL LAND VALUE - MARKET		122,000
TOTAL MARKET VALUE		708,976
SOH/AGL Deduction		321,582
ASSESSED VALUE		387,394
TOTAL EXEMPTION VALUE	HX HB	51,411
BASE TAXABLE VALUE		335,983
TOTAL JUST VALUE		708,976
NCON VALUE		0
INCOME VALUE		
PREVIOUS YEAR MKT VALUE		697,256

PERMIT NUM	DESCRIPTION	AMT	ISSUED
22008302	SWIM POOL	58,795	05/27/2022
22006713	CO ISSUED	0	04/28/2022
21013344	NEW CONSTR	368,330	09/30/2021
21010096	GARAGE	66,253	08/02/2021

SALES DATA

OFF RECORD Number	DATE	TYPE INST	Q U	V I	RSN CD	SALE PRICE
2672/166	10/05/2023	WD	Q	I	02	738,000
GRANTOR: BOLT FAMILY LIVING TR						
GRANTEE: HANLON WILLIAM F IV						
2559/0860	4/29/2022	WD	Q	I	02	642,100
GRANTOR: KEN GREENE CONTRACTOR						
GRANTEE: BOLT FAMILY LIVING						

BUILDING NOTES

BUILDING DIMENSIONS

BAS=[YR=2022] W16 S16 W11 FEP=[YR=2022] N8 W17 S15 E17 N7$ S7 W37 S15 W2 S15 E16 S2 FOP=[YR=2022] S7 E30 N7 W30$ E30 N2 E5 FGR=[YR=2022] E2 S25 E26 N28 W16 N3 W12 S6$ N6 E12 S3 E16 N6 W13 N44$ PTR= E10 N20 FDG=[YR=2022] E27 FCP=[YR=2022] E11 N34 W11 S34$ N34 W27 S34$ S20 W10$.

EXTRA FEATURES

LN	OB/XF CODE	DESCRIPTION	BLD	CAP	L	W	UNITS	UT	Adj R	ADJ UNIT PRICE	ORIG COND	YEAR ON	YEAR ACTUAL	Q	% COND	OB/XF MKT VALUE	NOTES
2	0860	POOL/SPA	0	100	0	0	1.00	UT	50,000.00	50,000.00	100	2022	2022	04	100	50,000	

LAND DESCRIPTION

TOTAL OB/XF 50,000

LN	USE CODE	CLS	LAND USE DESCRIPTION	CAP	RD	LOC ZONE	FRONT	DEPTH	TOT LND UTS	UNIT TYPE	DT	DPTH FACT	% COND	TOT ADJ	UNIT PRICE	ADJ UNIT PRICE	LAND VALUE	OTHER ADJUSTMENTS AND NOTES	YEAR	DENSITY	DECL	FRZ	YR	CONSRV
1	000134	C	RES POND	100	0003	OR	0.00	0.00	2.00	LT		1.00	1.00	1.00	61,000.00	61,000.00	122,000							

REVIEW DATE 01/17/2023 BY KW Total Acres: 0.00 Total Land Value: 122,000 Market: 0 Agricultural: 0 Common: 122,000 PRINTED 07/09/2026 BY SYS