LOT 34
CLEAR LAKE ESTATES UNIT 2
PBK 8/195

O'CONNELL RICHARD & HEATHER M
53689 CARRINGTON DR
CALLAHAN, FL 32011

2026

46-2N-25-0240-0034-0000

BUILDING CHARACTERISTICS

ELEMENT	CD	CONSTRUCTION
Exterior Wall	20	FACE BRICK 100
Roof Structur	03	GABLE/HIP 100
Roof Cover	03	COMP SHNGL 100
Interior Wall	05	DRYWALL 100
Interior Floo	13	LVT/LAMNT 100
Air Condition	03	CENTRAL 100
Heating Type	04	AIR DUCTED 100
Bedrooms		4 100
Bathrooms		2 100
Frame	02	WOOD FRAME 100
Stories	1.	1. 100
Units		0 100
Quality	04	Quality Level 04

DOR CODE 0100 SINGLE FAMILY
MAP NUM | MKT AREA 08
NEIGHBORHOOD/LOC 8015.100

AREA TYPE	TOTAL GROSS AREA	PCT OF BASE	YEAR	TOT ADJ AREA	SUBAREA MARKET VALUE
BAS	1,919	100	2023	1,919	293,966
FGR	497	55	2023	273	41,820
FOP	26	30	2023	8	1,225
UDG	400	55	2023	220	33,701
UOP	200	20	2023	40	6,128
TOTALS	3,042			2,460	376,840

MARKET ADJUSTMENTS

TYPE	MDL	EFF. AREA	TOT ADJ PTS	EFF. BASE RATE	REPL. COST NEW	AYB	EYB	ECON	FNCT		NORM	% COND
0900	01	2,460	111.8880	155.52	382,579	2023	2023	0	0	0	1.50	98.50

1 SNGL FAM 100% - 2024 Heated Area: 1919 HX Base Yr 2024

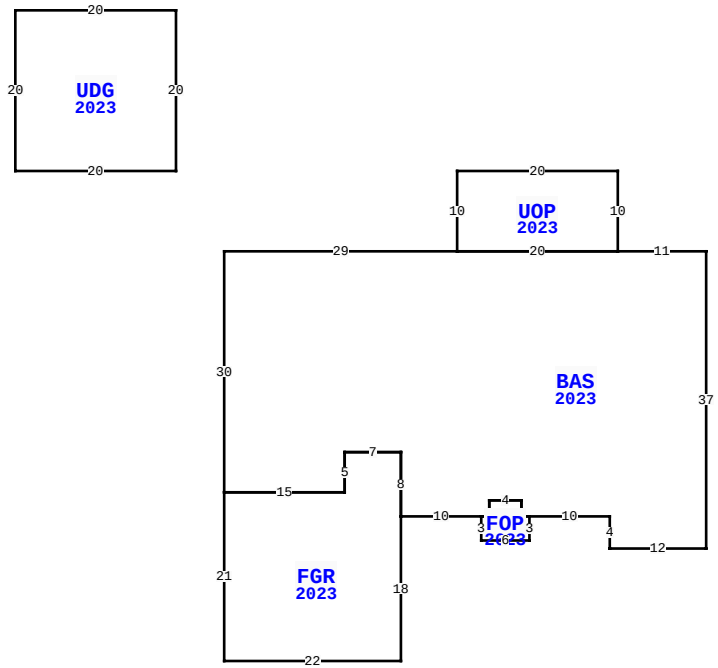

53689 CARRINGTON DR, CALLAHAN

BLD DATE		LGL DATE	
XF DATE		LAND DATE	05/04/2026 MLU
INC DATE		AG DATE	

NASSAU COUNTY PROPERTY

PAGE 1 of 1 6

VALUATION SUMMARY

VALUATION BY		STANDARD
Tax Group: 6	Tax Dist:	
BUILDING MARKET VALUE		376,840
TOTAL MARKET OB/XF VALUE		3,465
TOTAL LAND VALUE - MARKET		61,000
TOTAL MARKET VALUE		441,305
SOH/AGL Deduction		120,020
ASSESSED VALUE		321,285
TOTAL EXEMPTION VALUE	HX HB	51,411
BASE TAXABLE VALUE		269,874
TOTAL JUST VALUE		441,305
NCON VALUE		0
INCOME VALUE		
PREVIOUS YEAR MKT VALUE		442,383

PERMIT NUM	DESCRIPTION	AMT	ISSUED
22003646	CO ISSUED	0	01/30/2023
22003646	NEW CONSTR	317,148	03/07/2022
22003649	GARAGE	23,952	03/07/2022

SALES DATA

OFF RECORD Number	DATE	TYPE INST	Q U	V I	RSN CD	SALE PRICE
2511/1543	11/05/2021	WD	Q	V	01	52,000
GRANTOR: KEN GREENE CONTRACTOR						
GRANTEE: O'CONNELL RICHARD &						
2262/1949	3/11/2019	WD	U	V	30	1,828,000
GRANTOR: GREEN KENNETH L						
GRANTEE: KEN GREENE CONTRACT						

BUILDING NOTES

BUILDING DIMENSIONS

BAS=[YR=2023;ORIG=40,0] E29 E20 E11 S37 W12 N4 W10 W1 N2 W4 S2 W1 W10 N8 W7 S5 W15 N30 $
FGR=[YR=2023;ORIG=40,30] E15 N5 E7 S8 S18 W22 N21 $
UDG=[YR=2023;ORIG=14,-30] E20 S20 W20 N20 $
UOP=[YR=2023;ORIG=69,0] E20 N10 W20 S10 $
FOP=[YR=2023;ORIG=72,33] E1 N2 E4 S2 E1 S3 W6 N3 $
.

EXTRA FEATURES

LN	OB/XF CODE	DESCRIPTION	BLD	CAP	L	W	UNITS	UT	Adj R	ADJ UNIT PRICE	ORIG COND	YEAR ON	YEAR ACTUAL	Q	% COND	OB/XF MKT VALUE	NOTES
1	0500	FP-PRE FAB	0	100	0	0	1.00	UT	3,500.00	3,500.00	100	2024	2023	03	99	3,465	

LAND DESCRIPTION

TOTAL OB/XF 3,465

LN	USE CODE	CLS	LAND USE DESCRIPTION	CAP	RD	LOC ZONE	FRONT	DEPTH	TOT LND UTS	UNIT TYPE	DT	DPTH FACT	% COND	TOT ADJ	UNIT PRICE	ADJ UNIT PRICE	LAND VALUE	OTHER ADJUSTMENTS AND NOTES	YEAR	DENSITY	DECL	FRZ	YR	CONSRV
1	000100	C	RES	100	0003	OR	0.00	0.00	1.00	LT		1.00	1.00	1.00	61,000.00	61,000.00	61,000							

REVIEW DATE 08/11/2023 BY KW Total Acres: 0.00 Total Land Value: 61,000 Market: 0 Agricultural: 0 Common: 61,000 PRINTED 07/09/2026 BY SYS