LOT 40
IN OR 1943/812
LANCEFORD PB 6/356

FASSBENDER WILLIAM & COURTNEY L
96163 DOWLING DR
YULEE, FL 32097

2026

45-3N-28-121L-0040-0000

BUILDING CHARACTERISTICS

ELEMENT	CD	CONSTRUCTION
Exterior Wall	16	WD FR STUC 100
Roof Structur	08	IRREGULAR 100
Roof Cover	03	COMP SHNGL 100
Interior Wall	05	DRYWALL 100
Interior Floo	11	CLAY TILE 50
Interior Floo	14	CARPET 50
Air Condition	03	CENTRAL 100
Heating Type	04	AIR DUCTED 100
Bedrooms		4 100
Bathrooms		3 100
Frame	02	WOOD FRAME 100
Stories	1.5	1.5 100
Units		0 100
Occupancy	00	NONE 100
Quality	01	Quality Level 01
DOR CODE	0100	SINGLE FAMILY
MAP NUM		MKT AREA 04
NEIGHBORHOOD/LOC	4026.00	

AREA TYPE	TOTAL GROSS AREA	PCT OF BASE	YEAR	TOT ADJ AREA	SUBAREA MARKET VALUE
BAS	2,187	100	2005	2,187	266,173
FGR	532	55	2005	293	35,660
FOP	47	30	2005	14	1,704
FSP	361	40	2005	144	17,526
FUS	385	100	2005	385	46,858
TOTALS	3,512			3,023	367,920

MARKET ADJUSTMENTS

TYPE	MDL	EFF. AREA	TOT ADJ PTS	EFF. BASE RATE	REPL. COST NEW	AYB	EYB	ECON	FNCT		NORM	% COND
0900	01	3,023	97.2900	135.23	408,800	2005	2005	0	0	0	10.00	90.00

1 SNGL FAM 100% - 2015 Heated Area: 2572 HX Base Yr 2015

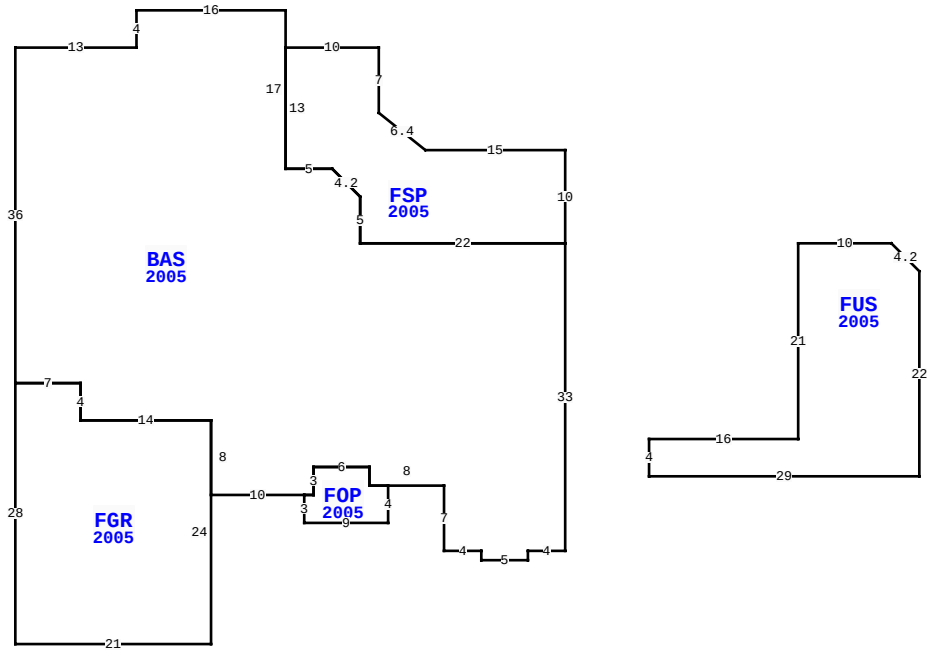

96163 DOWLING DR, YULEE

BLD DATE	01/21/2015	KK	LGL DATE		
XF DATE			LAND DATE	05/06/2025	MLU
INC DATE			AG DATE		

NASSAU COUNTY PROPERTY

PAGE 1 of 2 4

VALUATION SUMMARY

VALUATION BY		STANDARD
Tax Group: 4	Tax Dist:	
BUILDING MARKET VALUE		407,402
TOTAL MARKET OB/XF VALUE		63,857
TOTAL LAND VALUE - MARKET		125,000
TOTAL MARKET VALUE		596,259
SOH/AGL Deduction		164,587
ASSESSED VALUE		431,672
TOTAL EXEMPTION VALUE	HX HB	51,411
BASE TAXABLE VALUE		380,261
TOTAL JUST VALUE		596,259
NCON VALUE		0
INCOME VALUE		
PREVIOUS YEAR MKT VALUE		658,794

PERMIT NUM	DESCRIPTION	AMT	ISSUED
B1800575	GARAGE	27,552	01/18/2018
B24764	ADDITION	15,624	06/01/2011
M0509182	MECH OTHER	0	02/01/2005
B14096	NEW CONSTR	0	01/01/2005
P0408816	OTHER	0	12/01/2004
E0413992	ELEC OTHER	2,500	12/01/2004

SALES DATA

OFF RECORD Number	DATE	TYPE INST	Q U	V I	RSN CD	SALE PRICE
1943/0812	10/21/2014	WD	Q	I	01	399,900
GRANTOR: SMITH VIRGINIA L & AL						
GRANTEE: FASSBENDER WILLIAM						
1731/1832	4/01/2011	WD	Q	I	02	241,000
GRANTOR: ROSENBLOOM BERNARD &						
GRANTEE: SMITH VIRGINIA L						

BUILDING NOTES

EXTRA FEATURES

LN	OB/XF CODE	DESCRIPTION	BLD	CAP	L	W	UNITS	UT	Adj R	ADJ UNIT PRICE	ORIG COND	YEAR ON	YEAR ACTUAL	Q	% COND	OB/XF MKT VALUE	NOTES
2	0860	POOL/SPA	0	100	0	0	1.00	UT	60,000.00	60,000.00	100	2011	2011	05	90	54,000	
3	0911	SCRN RM A	0	100	0	0	1,369.00	SF	18.00	18.00	100	2011	2011	3	40	9,857	

BUILDING DIMENSIONS

FSP=[YR=2005] N10W15 U4 L5 N7W10S13E5 R3 D3
S5E22$BAS=[YR=2005] W22N5 U3 L3 W5N17W16S4W13S36FGR=[YR=2005]
S28 E21N24W14N4W7$E7S4E14S8E10 FOP=[YR=2005]
S3E9N4W2N2W6S3W1$E1N3 E6S2E8S7E4S1E5N1E4N33$ PTR=E25
FUS=[YR=2005] S21W16S4E29N22 L3 U3 W10$ W25$.

LAND DESCRIPTION

TOTAL OB/XF 63,857

LN	USE CODE	CLS	LAND USE DESCRIPTION	CAP	RD	LOC ZONE	FRONT	DEPTH	TOT LND UTS	UNIT TYPE	DT	DPTH FACT	% COND	TOT ADJ	UNIT PRICE	ADJ UNIT PRICE	LAND VALUE	OTHER ADJUSTMENTS AND NOTES	YEAR	DENSITY	DECL	FRZ	YR	CONSRV
1	000134	C	RES POND	100		RSF-1	0.00	0.00	1.00	LT		1.00	1.00	1.00	125,000.00	125,000.00	125,000							

REVIEW DATE 05/15/2024 BY NWA Total Acres: 0.00 Total Land Value: 125,000 Market: 0 Agricultural: 0 Common: 125,000 PRINTED 07/09/2026 BY SYS

LOT 40
IN OR 1943/812
LANCEFORD PB 6/356

FASSBENDER WILLIAM & COURTNEY L
96163 DOWLING DR
YULEE, FL 32097

2026

45-3N-28-121L-0040-0000

BUILDING CHARACTERISTICS

ELEMENT	CD	CONSTRUCTION
Exterior Wall	16	WD FR STUC 100
Roof Structur	03	GABLE/HIP 100
Roof Cover	03	COMP SHNGL 100
Interior Wall	05	DRYWALL 100
Interior Floo	11	CLAY TILE 100
Air Condition	03	CENTRAL 100
Heating Type	03	FORCED AIR 100
Bedrooms		0 100
Bathrooms		1 100
Frame	02	WOOD FRAME 100
Stories	1.	1. 100
Units		0 100
Occupancy	00	NONE 100
Quality	01	Quality Level 01

DOR CODE	0100	SINGLE FAMILY	
MAP NUM		MKT AREA	04
NEIGHBORHOOD/LOC	4026.00		

AREA TYPE	TOTAL GROSS AREA	PCT OF BASE	YEAR	TOT ADJ AREA	SUBAREA MARKET VALUE
BAS	600	100	2018	600	39,482
TOTALS	600			600	39,482

MARKET ADJUSTMENTS

TYPE	MDL	EFF. AREA	TOT ADJ PTS	EFF. BASE RATE	REPL. COST NEW	AYB	EYB	ECON	FNCT		NORM	% COND
0150	01	600	121.7700	68.19	40,914	2018	2018	0	0	0	3.50	96.50

2 ACCESORY U 100% - 2015 Heated Area: 600 HX Base Yr 2015

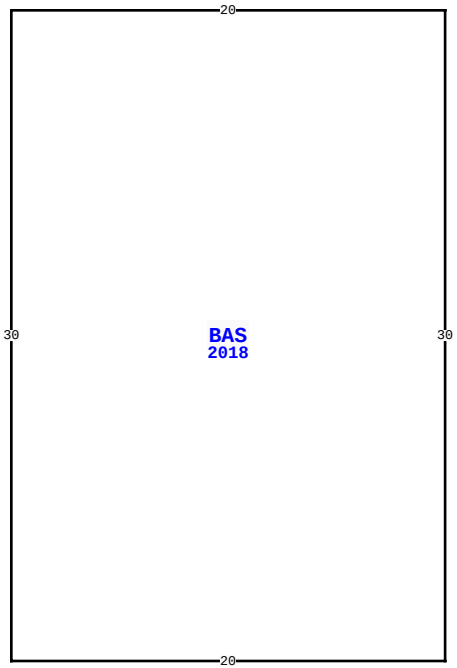

96163 DOWLING DR, YULEE

BLD DATE	01/21/2015 KK	LGL DATE	
XF DATE		LAND DATE	05/06/2025 MLU
INC DATE		AG DATE	

NASSAU COUNTY PROPERTY

PAGE 2 of 2 4

VALUATION SUMMARY

VALUATION BY		STANDARD
Tax Group: 4	Tax Dist:	
BUILDING MARKET VALUE		407,402
TOTAL MARKET OB/XF VALUE		63,857
TOTAL LAND VALUE - MARKET		125,000
TOTAL MARKET VALUE		596,259
SOH/AGL Deduction		164,587
ASSESSED VALUE		431,672
TOTAL EXEMPTION VALUE	HX HB	51,411
BASE TAXABLE VALUE		380,261
TOTAL JUST VALUE		596,259
NCON VALUE		0
INCOME VALUE		
PREVIOUS YEAR MKT VALUE		658,794

PERMIT NUM	DESCRIPTION	AMT	ISSUED

SALES DATA

OFF RECORD Number	DATE	TYPE INST	Q / U	V / I	RSN CD	SALE PRICE
1943/0812	10/21/2014	WD	Q	I	01	399,900
GRANTOR: SMITH VIRGINIA L & AL						
GRANTEE: FASSBENDER WILLIAM						
1731/1832	4/01/2011	WD	Q	I	02	241,000
GRANTOR: ROSENBLOOM BERNARD &						
GRANTEE: SMITH VIRGINIA L						

BUILDING NOTES

BUILDING DIMENSIONS

BAS=[YR=2018] W20 S30 E20 N30$.

EXTRA FEATURES

L N	OB/XF CODE	DESCRIPTION	BLD	CAP	L	W	UNITS	UT	Adj R	ADJ UNIT PRICE	ORIG COND	YEAR ON	YEAR ACTUAL	Q	% COND	OB/XF MKT VALUE	NOTES

LAND DESCRIPTION

TOTAL OB/XF 0

L N	USE CODE	CLS	LAND USE DESCRIPTION	CAP	R D	LOC ZONE	FRONT	DEPTH	TOT LND UTS	UNIT TYPE	D T	DPTH FACT	% COND	TOT ADJ	UNIT PRICE	ADJ UNIT PRICE	LAND VALUE	OTHER ADJUSTMENTS AND NOTES	YEAR	DENSITY	DECL	FRZ	YR	CONSRV

REVIEW DATE 05/15/2024 BY NWA Total Acres: 0.00 Total Land Value: 125,000 Market: 0 Agricultural: 0 Common: 125,000 PRINTED 07/09/2026 BY SYS