LOT 6
IN OR 1864/1195
LANCEFORD PB 6/356

FIELDS TIMOTHY J & TINA L
96112 DOWLING DR
YULEE, FL 32097

2026

45-3N-28-121L-0006-0000

NASSAU COUNTY PROPERTY

BUILDING CHARACTERISTICS

ELEMENT	CD	CONSTRUCTION
Exterior Wall	31	HARDIE BRD 100
Roof Structur	08	IRREGULAR 100
Roof Cover	03	COMP SHNGL 100
Interior Wall	05	DRYWALL 100
Interior Floo	13	LVT/LAMNT 50
Interior Floo	14	CARPET 50
Air Condition	03	CENTRAL 100
Heating Type	04	AIR DUCTED 100
Bedrooms		6 100
Bathrooms		4 100
Frame	02	WOOD FRAME 100
Stories	2.	2. 100
Units		0 100
Occupancy	00	NONE 100
Quality	04	Quality Level 04
DOR CODE	0100	SINGLE FAMILY
MAP NUM		MKT AREA 04
NEIGHBORHOOD/LOC	4026.00	

AREA TYPE	TOTAL GROSS AREA	PCT OF BASE	YEAR	TOT ADJ AREA	SUBAREA MARKET VALUE
BAS	1,289	100	2015	1,289	190,090
FGR	534	55	2015	294	43,356
FOP	127	30	2015	38	5,604
FOP	240	30	2015	72	10,618
FUS	1,469	100	2015	1,469	216,635
PTO	32	5	2015	2	295
STR	32	10	2015	3	442
STR	42	10	2015	4	590
TOTALS	3,765			3,171	467,631

MARKET ADJUSTMENTS

TYPE	MDL	EFF. AREA	TOT ADJ PTS	EFF. BASE RATE	REPL. COST NEW	AYB	EYB	ECON	FNCT		NORM	% COND
0900	01	3,171	111.0900	154.42	489,666	2015	2015	0	0	0	4.50	95.50

1 SNGL FAM 100% - 2016 Heated Area: 2758 HX Base Yr 2016

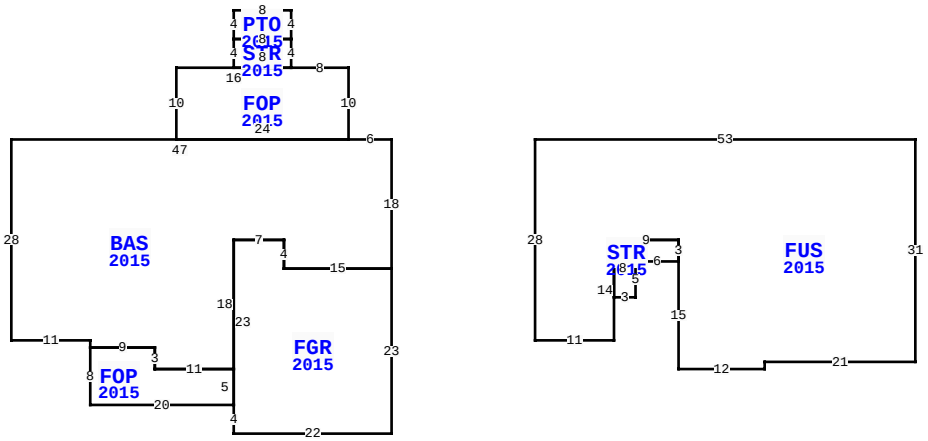

96112 DOWLING DR, YULEE

BLD DATE		LGL DATE	
XF DATE		LAND DATE	04/27/2026 MLU
INC DATE		AG DATE	

VALUATION SUMMARY

VALUATION BY		STANDARD
Tax Group: 4	Tax Dist:	
BUILDING MARKET VALUE		467,631
TOTAL MARKET OB/XF VALUE		84,250
TOTAL LAND VALUE - MARKET		230,000
TOTAL MARKET VALUE		781,881
SOH/AGL Deduction		304,297
ASSESSED VALUE		477,584
TOTAL EXEMPTION VALUE	HX HB	51,411
BASE TAXABLE VALUE		426,173
TOTAL JUST VALUE		781,881
NCON VALUE		0
INCOME VALUE		
PREVIOUS YEAR MKT VALUE		721,167

PERMIT NUM	DESCRIPTION	AMT	ISSUED
B1632493	SWIM POOL	35,000	06/01/2016
B1530246	CO ISSUED	0	07/08/2015
B1530246	NEW CONSTR	345,593	04/01/2015

SALES DATA

OFF RECORD Number	DATE	TYPE INST	Q U	V I	RSN CD	SALE PRICE
1864/1195	6/05/2013	WD	Q	V	01	89,000
GRANTOR: PEACOCK MARSHA TRUSTE						
GRANTEE: FIELDS TIMOTHY J &						
1740/0531	5/19/2011	QC	U	V	11	100
GRANTOR: BLACKROCK DEVELOPMENT						
GRANTEE: PEACOCK CONSULTING						

BUILDING NOTES

BUILDING DIMENSIONS

BAS=[YR=2015] W6 FOP=[YR=2015] N10 W8 STR=[YR=2015] N4
PTO=[YR=2015] N4 W8 S4 E8$ W8 S4 E8$ W16 S10 E24$ W47 S28
E11 S1 FOP=[YR=2015] S8 E20 FGR=[YR=2015] S4 E22 N23 W15 N4
W7 S23$ N5 W11 N3 W9$ E9 S3 E11 N18 E7 S4 E15 N18$
PTR=[YR=2015] E20 FUS=[YR=2015] E53 S31 W21 S1 W12 N15
STR=[YR=2015] W6 S5 W3 N8 E9 S3$ N3 W9 S14 W11 N28$ W20$.

EXTRA FEATURES

LN	OB/XF CODE	DESCRIPTION	BLD	CAP	L	W	UNITS	UT	Adj R	ADJ UNIT PRICE	ORIG COND	YEAR ON	YEAR ACTUAL	Q	% COND	OB/XF MKT VALUE	NOTES
1	0504	FP-ELECTRI	0	100	0	0	1.00	UT	2,000.00	2,000.00	100	2015	2015	3	96	1,920	
4	0860	POOL/SPA	0	100	28	0	1.00	UT	50,000.00	50,000.00	100	2016	2016	04	95	47,500	
6	0300	BOAT DCK W	0	100	0	0	1,161.00	SF	40.00	40.00	100	2016	2016	3	75	34,830	

LAND DESCRIPTION

TOTAL OB/XF 84,250

LN	USE CODE	CLS	LAND USE DESCRIPTION	CAP	RD	LOC ZONE	FRONT	DEPTH	TOT LND UTS	UNIT TYPE	DT	DPTH FACT	% COND	TOT ADJ	UNIT PRICE	ADJ UNIT PRICE	LAND VALUE	OTHER ADJUSTMENTS AND NOTES	YEAR	DENSITY	DECL	FRZ	YR	CONSRV
1	000116	C	RES MARSH	100		RSF-	1100.00	215.00	100.00	FF		1.00	1.00	1.00	2,300.00	2,300.00	230,000							

REVIEW DATE 01/19/2023 BY DJA Total Acres: 0.00 Total Land Value: 230,000 Market: 0 Agricultural: 0 Common: 230,000 PRINTED 07/09/2026 BY SYS