PT JOHN CHISTOPHER GRANT
SEC 45-2N-28E IN OR 2701/863

NEASE LIVING TRUST/NEASE STEPHEN E TRUSTEE
940377 OLD NASSAUVILLE RD
FERNANDINA BEACH, FL 32034

2026

45-2N-28-0000-0010-0050

NASSAU COUNTY PROPERTY

BUILDING CHARACTERISTICS

ELEMENT	CD	CONSTRUCTION
Exterior Wall	31	HARDIE BRD 100
Roof Structur	03	GABLE/HIP 100
Roof Cover	03	COMP SHNGL 100
Interior Wall	05	DRYWALL 100
Interior Floo	13	LVT/LAMNT 90
Interior Floo	11	CLAY TILE 10
Air Condition	03	CENTRAL 100
Heating Type	04	AIR DUCTED 100
Bedrooms		3 100
Bathrooms		2 100
Frame	02	WOOD FRAME 100
Stories	2.	2. 100
Units		0 100
Occupancy	00	NONE 100
Quality	03	Quality Level 03
DOR CODE	0100	SINGLE FAMILY
MAP NUM		MKT AREA 04
NEIGHBORHOOD/LOC	4005.00	

AREA TYPE	TOTAL GROSS AREA	PCT OF BASE	YEAR	TOT ADJ AREA	SUBAREA MARKET VALUE
BAS	2,157	100	2022	2,157	352,538
FGR	748	55	2022	411	67,173
FOP	80	30	2022	24	3,922
FOP	204	30	2022	61	9,969
FSP	270	40	2022	108	17,652
FUS	464	100	2022	464	75,836
PTO	66	5	2022	3	490
STR	21	10	2022	2	327
TOTALS	4,010			3,230	527,909

MARKET ADJUSTMENTS

TYPE	MDL	EFF. AREA	TOT ADJ PTS	EFF. BASE RATE	REPL. COST NEW	AYB	EYB	ECON	FNCT		NORM	% COND
0500	01	3,230	99.4520	165.09	533,241	2022	2022	0	0	0	1.00	99.00

1 SFR CUST 100% - 2023 Heated Area: 2621 HX Base Yr 2023

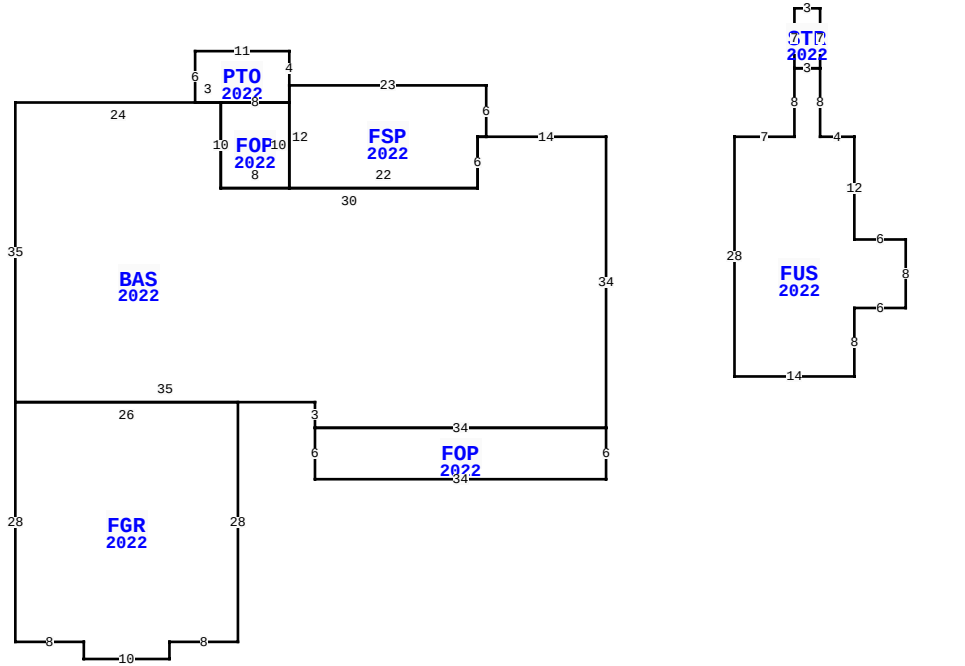

940377 OLD NASSAUVILLE RD, FERNANDINA BEACH

BLD DATE		LGL DATE	
XF DATE		LAND DATE	05/09/2025 MLU
INC DATE		AG DATE	

VALUATION SUMMARY

VALUATION BY		STANDARD
Tax Group: 4	Tax Dist:	
BUILDING MARKET VALUE		566,677
TOTAL MARKET OB/XF VALUE		0
TOTAL LAND VALUE - MARKET		135,000
TOTAL MARKET VALUE		701,677
SOH/AGL Deduction		338,182
ASSESSED VALUE		363,495
TOTAL EXEMPTION VALUE	HX HB	51,411
BASE TAXABLE VALUE		312,084
TOTAL JUST VALUE		701,677
NCON VALUE		0
INCOME VALUE		
PREVIOUS YEAR MKT VALUE		683,576

PERMIT NUM	DESCRIPTION	AMT	ISSUED
22018769	CO ISSUED	0	12/22/2022
21017755	GARAGE	100,598	12/23/2021
B2116625	NEW CONSTR	444,182	12/01/2021

SALES DATA

OFF RECORD Number	DATE	TYPE INST	Q / U	V / I	RSN CD	SALE PRICE
2701/863	2/28/2024	WD	U	I	11	100
GRANTOR: NEASE STEVE E & LAURA						
GRANTEE: NEASE LIVING TRUST						
1601/0250	1/16/2009	QC	U	V	19	100
GRANTOR: NEASE STEVE E & LAURA						
GRANTEE: NEASE STEVE E & LAU						

BUILDING NOTES

BUILDING DIMENSIONS

BAS=[YR=2022] W14 FSP=[YR=2022] N6 W23 PTO=[YR=2022] N4 W11 S6 E3 FOP=[YR=2022] S10 E8 N10 W8$ E8 N2$ S12 E22 N6 E1$ W1 S6 W30 N10 W24 S35 FGR=[YR=2022] S28 E8 S2 E10 N2 E8 N28 W26$ E35 S3 FOP=[YR=2022] S6 E34 N6 W34$ E34 N34$ PTR=E15 FUS=[YR=2022] E7 N8 STR=[YR=2022] N7E3S7W3 $ E3 S8 E4 S12 E6 S8 W6 S8 W14 N28$ W15$.

EXTRA FEATURES

LN	OB/XF CODE	DESCRIPTION	BLD	CAP	L	W	UNITS	UT	Adj R	ADJ UNIT PRICE	ORIG COND	YEAR ON	YEAR ACTUAL	Q	% COND	OB/XF MKT VALUE	NOTES

LAND DESCRIPTION

TOTAL OB/XF 0

LN	USE CODE	CLS	LAND USE DESCRIPTION	CAP	RD	LOC ZONE	FRONT	DEPTH	TOT LND UTS	UNIT TYPE	DT	DPTH FACT	% COND	TOT ADJ	UNIT PRICE	ADJ UNIT PRICE	LAND VALUE	OTHER ADJUSTMENTS AND NOTES	YEAR	DENSITY	DECL	FRZ	YR	CONSRV
1	000100	C	RES	100		OR	0.00	0.00	1.35	AC		1.00	1.00	1.00	100,000.00	100,000.00	135,000							

REVIEW DATE 01/08/2023 BY DJ Total Acres: 1.35 Total Land Value: 135,000 Market: 0 Agricultural: 0 Common: 135,000 PRINTED 07/09/2026 BY SYS

PT JOHN CHISTOPHER GRANT
SEC 45-2N-28E IN OR 2701/863

NEASE LIVING TRUST/NEASE STEPHEN E TRUSTEE
940377 OLD NASSAUVILLE RD
FERNANDINA BEACH, FL 32034

2026

45-2N-28-0000-0010-0050

NASSAU COUNTY PROPERTY

BUILDING CHARACTERISTICS

ELEMENT	CD	CONSTRUCTION
Exterior Wall	25	MOD METAL 100
Roof Structur	10	STEEL FRME 100
Roof Cover	12	MODULAR MT 100
Interior Wall	01	MINIMUM 100
Interior Floo	03	CONC FINSH 100
Air Condition	99	N/A 100
Heating Type	01	NONE 100
Bedrooms		0 100
Bathrooms		0 100
Frame	05	STEEL 100
Stories	0	0 100
Units		0 100
Occupancy	00	NONE 100
Quality	03	Quality Level 03

DOR CODE 0100 SINGLE FAMILY
MAP NUM | MKT AREA 04
NEIGHBORHOOD/LOC 4005.00

AREA TYPE	TOTAL GROSS AREA	PCT OF BASE	YEAR	TOT ADJ AREA	SUBAREA MARKET VALUE
BAS	1,680	100	2022	1,680	38,768
TOTALS	1,680			1,680	38,768

MARKET ADJUSTMENTS

TYPE	MDL	EFF. AREA	TOT ADJ PTS	EFF. BASE RATE	REPL. COST NEW	AYB	EYB	ECON	FNCT		NORM	% COND
6500	01	1,680	61.0000	23.79	39,967	2022	2022	0	0	0	3.00	97.00

2 GARAGE RES 100% - 2023 Heated Area: 1680 HX Base Yr 2023

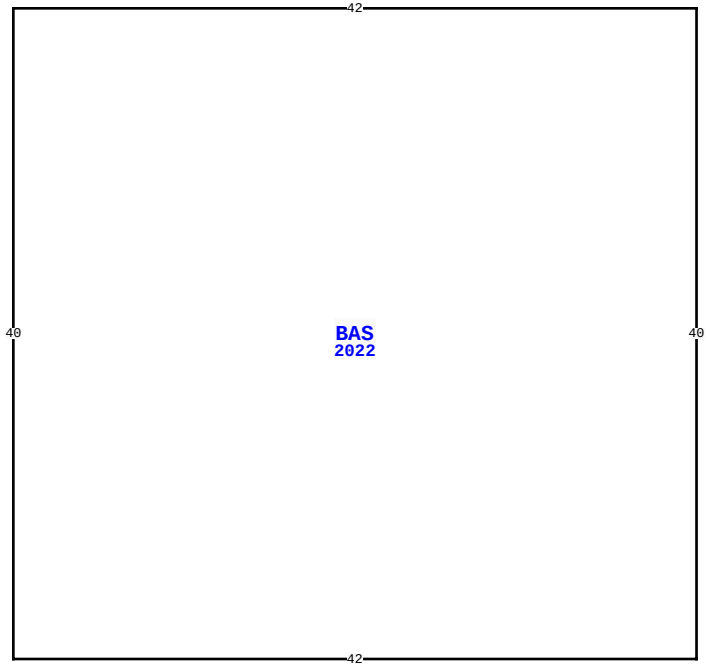

940377 OLD NASSAUVILLE RD, FERNANDINA BEACH

BLD DATE		LGL DATE	
XF DATE		LAND DATE	05/09/2025 MLU
INC DATE		AG DATE	

VALUATION SUMMARY

VALUATION BY		STANDARD
Tax Group: 4	Tax Dist:	
BUILDING MARKET VALUE		566,677
TOTAL MARKET OB/XF VALUE		0
TOTAL LAND VALUE - MARKET		135,000
TOTAL MARKET VALUE		701,677
SOH/AGL Deduction		338,182
ASSESSED VALUE		363,495
TOTAL EXEMPTION VALUE	HX HB	51,411
BASE TAXABLE VALUE		312,084
TOTAL JUST VALUE		701,677
NCON VALUE		0
INCOME VALUE		
PREVIOUS YEAR MKT VALUE		683,576

PERMIT NUM	DESCRIPTION	AMT	ISSUED

SALES DATA

OFF RECORD Number	DATE	TYPE INST	Q / U	V / I	RSN CD	SALE PRICE
2701/863	2/28/2024	WD	U	I	11	100
GRANTOR: NEASE STEVE E & LAURA						
GRANTEE: NEASE LIVING TRUST						
1601/0250	1/16/2009	QC	U	V	19	100
GRANTOR: NEASE STEVE E & LAURA						
GRANTEE: NEASE STEVE E & LAU						

BUILDING NOTES

BUILDING DIMENSIONS

BAS=[YR=2022] W42S40E42N40$.

EXTRA FEATURES

LN	OB/XF CODE	DESCRIPTION	BLD	CAP	L	W	UNITS	UT	Adj R	ADJ UNIT PRICE	ORIG COND	YEAR ON	YEAR ACTUAL	Q	% COND	OB/XF MKT VALUE	NOTES

LAND DESCRIPTION

TOTAL OB/XF 0

LN	USE CODE	CLS	LAND USE DESCRIPTION	CAP	RD	LOC ZONE	FRONT	DEPTH	TOT LND UTS	UNIT TYPE	DT	DPTH FACT	% COND	TOT ADJ	UNIT PRICE	ADJ UNIT PRICE	LAND VALUE	OTHER ADJUSTMENTS AND NOTES	YEAR	DENSITY	DECL	FRZ	YR	CONSRV

REVIEW DATE 01/08/2023 BY DJ Total Acres: 1.35 Total Land Value: 135,000 Market: 0 Agricultural: 0 Common: 135,000 PRINTED 07/09/2026 BY SYS