LOT 1 IN OR 1197/995 (EX PT
R/W IN OR 1930/1280 & UTIL
ESMT IN OR 910/1136)

JAX FOODS LLC/
3770 SALT MEADOW COURT SOUTH
JACKSONVILLE, FL 32224

2026

44-2N-27-1970-0001-0000

NASSAU COUNTY PROPERTY

BUILDING CHARACTERISTICS

ELEMENT	CD	CONSTRUCTION
Exterior Wall	16	WD FR STUC 100
Roof Structur	09	RIDGE FRME 100
Roof Cover	04	BUILT-UP 100
Interior Wall	08	DECORATIVE 60
Interior Wall	05	DRYWALL 40
Interior Floo	15	HARDTILE 100
Ceiling	01	FIN.SUSPD 100
Air Condition	04	ROOF TOP 100
Heating Type	04	AIR DUCTED 100
Fixtures		16 100
Frame	02	WOOD FRAME 100
Story Height		16 100
RMS		4 100
Stories	1.	1. 100
Units		0 100
Occupancy	00	NONE 100
Quality	03	Quality Level 03
DOR CODE	2200	FAST FOOD
MAP NUM		MKT AREA 04
NEIGHBORHOOD/LOC	4001.00	

AREA TYPE	TOTAL GROSS AREA	PCT OF BASE	YEAR	TOT ADJ AREA	SUBAREA MARKET VALUE
BAS	2,988	100	2002	2,988	660,851
CAN	36	30	2002	11	2,433
PTO	804	5	2002	40	8,846
PTO	232	5	2003	12	2,654
TOTALS	4,060			3,051	674,785

MARKET ADJUSTMENTS

TYPE	MDL	EFF. AREA	TOT ADJ PTS	EFF. BASE RATE	REPL. COST NEW	AYB	EYB	ECON	FNCT		NORM	% COND
2201	04	3,051	130.3640	279.96	854,158	2002	2002	0	0	0	21.00	79.00

1 FAST FOOD 0% - 0 Heated Area: 2988 HX Base Yr

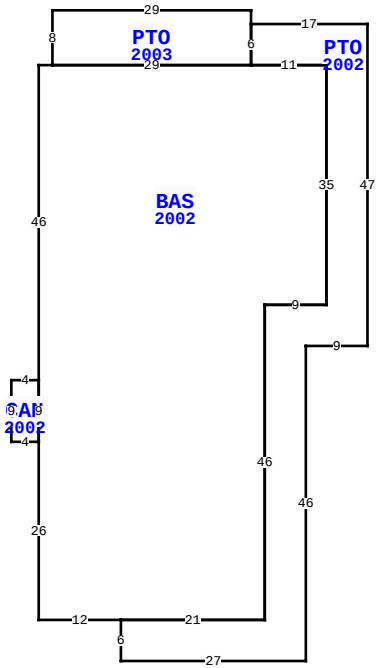

76106 SIDNEY PL, YULEE

BLD DATE		LGL DATE	
XF DATE		LAND DATE	04/20/2026 DC
INC DATE		AG DATE	

VALUATION SUMMARY

VALUATION BY	STANDARD
Tax Group: 4	Tax Dist:
BUILDING MARKET VALUE	674,785
TOTAL MARKET OB/XF VALUE	60,769
TOTAL LAND VALUE - MARKET	707,645
TOTAL MARKET VALUE	1,443,199
SOH/AGL Deduction	339,417
ASSESSED VALUE	1,103,782
TOTAL EXEMPTION VALUE	0
BASE TAXABLE VALUE	1,103,782
TOTAL JUST VALUE	1,443,199
NCON VALUE	0
INCOME VALUE	952424
PREVIOUS YEAR MKT VALUE	1,295,695

KENTUCKY FRIED CHICKEN- CLOSED AFTER 1/2025 KW

PERMIT NUM	DESCRIPTION	AMT	ISSUED
17006130	REMODEL	65,000	07/10/2017
E1529408	CHNGE SRVC	0	06/01/2015
E0209372	CHNGE SRVC	17,000	03/03/2002
B0209412	NEW CONSTR	229,840	03/01/2002
P025436	NEW CONSTR	2,000	01/01/2002
SU990139	SIGN	20,000	03/01/1999

SALES DATA

OFF RECORD Number	DATE	TYPE INST	Q / U	V / I	RSN CD	SALE PRICE
1197/0995	12/23/2003	WD	U	I	19	586,000
GRANTOR: KFC U S PROPERTIES IN						
GRANTEE: JAX FOODS INC						
1127/1357	4/07/2003	WD	Q	I	06	100
GRANTOR: KFC OF AMERICA INC						
GRANTEE: KFC US PROPERTIES I						

BUILDING NOTES

BUILDING DIMENSIONS

BAS=[YR=2002;ORIG=-46,6] W2 S46 S9 S26 E12 E21 N46 E9 N35 W11 W29 $
PTO=[YR=2002;ORIG=0,0] W17 S6 E11 S35 W9 S46 W21 S6 E27 N46 E9 N47 $
PTO=[YR=2003;ORIG=-17,0] N2 W29 S8 E29 N6 $
CAN=[YR=2002;ORIG=-48,52] W4 S9 E4 N9 $
.

EXTRA FEATURES

LN	OB/XF CODE	DESCRIPTION	BLD	CAP	L	W	UNITS	UT	Adj R	ADJ UNIT PRICE	ORIG COND	YEAR ON	YEAR ACTUAL	Q	% COND	OB/XF MKT VALUE	NOTES
1	0803	ASPHALT C	0	0	0	0	22,975.00	SF	2.00	2.00	100	2002	2002	3	50	22,975	
2	0812	CONCRETE C	0	0	0	0	1,680.00	SF	4.00	4.00	100	2002	2002	3	79	5,309	
3	0964	HALON SYST	0	0	4	24	96.00	SF	50.00	50.00	100	2002	2002	3	79	3,792	
4	0964	HALON SYST	0	0	4	8	32.00	SF	50.00	50.00	100	2002	2002	3	79	1,264	
5	0418	EXHST FAN	0	0	0	0	3.00	UT	400.00	400.00	100	2002	2002	3	20	240	
6	0972	ST LGHT UN	0	0	0	0	6.00	UT	2,530.00	2,530.00	100	2002	2002	3	52	7,894	
7	0975	ST LT/ARM	0	0	0	0	3.00	UT	500.00	500.00	100	2002	2002	3	52	780	
8	4950	BOLLARD	0	0	0	0	7.00	UT	100.00	100.00	100	2002	2002	3	100	700	
9	0400	CONC CURB	0	0	0	0	1,237.00	LF	15.00	15.00	100	2002	2002	3	84	15,586	
10	0402	CONC BUMPE	0	0	0	0	7.00	UT	25.00	25.00	100	2002	2002	3	84	147	

TOTAL OB/XF 58,687

LAND DESCRIPTION

LN	USE CODE	CLS	LAND USE DESCRIPTION	CAP	RD	LOC ZONE	FRONT	DEPTH	TOT LND UTS	UNIT TYPE	DT	DPTH FACT	% COND	TOT ADJ	UNIT PRICE	ADJ UNIT PRICE	LAND VALUE	OTHER ADJUSTMENTS AND NOTES	YEAR	DENSITY	DECL	FRZ	YR	CONSRV
1	002200	C	DRIVE-IN	0	0004	CHT			41,382.00	SF		1.00	1.00	0.90	19.00	17.10	707,632							
2	009400	C	RIGHT-OF-WAY	0	0004	CHT			0.13	AC		1.00	1.00	1.00	100.00	100.00	13							

REVIEW DATE 04/11/2024 BY KWA Total Acres: 1.08 Total Land Value: 707,645 Market: 0 Agricultural: 0 Common: 707,645 PRINTED 07/09/2026 BY SYS

LOT 1 IN OR 1197/995 (EX PT
R/W IN OR 1930/1280 & UTIL
ESMT IN OR 910/1136)

JAX FOODS LLC/
3770 SALT MEADOW COURT SOUTH
JACKSONVILLE, FL 32224

2026

44-2N-27-1970-0001-0000

NASSAU COUNTY PROPERTY

BUILDING CHARACTERISTICS

ELEMENT	CD	CONSTRUCTION

DOR CODE	2200	FAST FOOD	
MAP NUM		MKT AREA	04
NEIGHBORHOOD/LOC	4001.00		

AREA TYPE	TOTAL GROSS AREA	PCT OF BASE	YEAR	TOT ADJ AREA	SUBAREA MARKET VALUE
TOTALS					

MARKET ADJUSTMENTS

TYPE	MDL	EFF. AREA	TOT ADJ PTS	EFF. BASE RATE	REPL. COST NEW	AYB	EYB	ECON	FNCT		NORM	% COND

BLD DATE		LGL DATE	
XF DATE		LAND DATE	04/20/2026 DC
INC DATE		AG DATE	

VALUATION SUMMARY

VALUATION BY	STANDARD
Tax Group: 4	Tax Dist:
BUILDING MARKET VALUE	674,785
TOTAL MARKET OB/XF VALUE	60,769
TOTAL LAND VALUE - MARKET	707,645
TOTAL MARKET VALUE	1,443,199
SOH/AGL Deduction	339,417
ASSESSED VALUE	1,103,782
TOTAL EXEMPTION VALUE	0
BASE TAXABLE VALUE	1,103,782
TOTAL JUST VALUE	1,443,199
NCON VALUE	0
INCOME VALUE	952424
PREVIOUS YEAR MKT VALUE	1,295,695

PERMIT NUM	DESCRIPTION	AMT	ISSUED

SALES DATA

OFF RECORD Number	DATE	TYPE INST	Q / U	V / I	RSN CD	SALE PRICE
1197/0995	12/23/2003	WD	U	I	19	586,000
GRANTOR: KFC U S PROPERTIES IN						
GRANTEE: JAX FOODS INC						
1127/1357	4/07/2003	WD	Q	I	06	100
GRANTOR: KFC OF AMERICA INC						
GRANTEE: KFC US PROPERTIES I						

EXTRA FEATURES

LN	OB/XF CODE	DESCRIPTION	BLD	CAP	L	W	UNITS	UT	Adj R	ADJ UNIT PRICE	ORIG COND	YEAR ON	YEAR ACTUAL	Q	% COND	OB/XF MKT VALUE	NOTES
11	1123	CB 8"	0	0	0	0	300.00	SF	6.15	6.15	100	2002	2002	3	79	1,458	
12	0463	FENCE GATE	0	0	0	0	4.00	UT	300.00	300.00	100	2002	2002	3	52	624	

BUILDING NOTES

BUILDING DIMENSIONS

LAND DESCRIPTION

TOTAL OB/XF 2,082

LN	USE CODE	CLS	LAND USE DESCRIPTION	CAP	RD	LOC ZONE	FRONT	DEPTH	TOT LND UTS	UNIT TYPE	DT	DPTH FACT	% COND	TOT ADJ	UNIT PRICE	ADJ UNIT PRICE	LAND VALUE	OTHER ADJUSTMENTS AND NOTES	YEAR	DENSITY	DECL	FRZ	YR	CONSRV

REVIEW DATE 04/11/2024 BY KWA Total Acres: 1.08 Total Land Value: 707,645 Market: 0 Agricultural: 0 Common: 707,645 PRINTED 07/09/2026 BY SYS