LOT 67
ESMT PT OR 2176/356
EAST NASSAU-WILDLIGHT PHASE 1A

HARBISON DENNIS & ROSANNE
237 FLOCO AVE
YULEE, FL 32097

2026

44-2N-27-1000-0067-0000

NASSAU COUNTY PROPERTY

BUILDING CHARACTERISTICS

ELEMENT	CD	CONSTRUCTION
Exterior Wall	10	ABOVE AVG 100
Roof Structur	03	GABLE/HIP 100
Roof Cover	03	COMP SHNGL 100
Interior Wall	05	DRYWALL 100
Interior Floo	13	LVT/LAMNT 90
Interior Floo	11	CLAY TILE 10
Air Condition	03	CENTRAL 100
Heating Type	04	AIR DUCTED 100
Bedrooms		4 100
Bathrooms		2 100
Frame	02	WOOD FRAME 100
Stories	1.	1. 100
Units		0 100
Occupancy	00	NONE 100
Quality	03	Quality Level 03
DOR CODE	0100	SINGLE FAMILY
MAP NUM		MKT AREA 04
NEIGHBORHOOD/LOC	4086.00	

AREA TYPE	TOTAL GROSS AREA	PCT OF BASE	YEAR	TOT ADJ AREA	SUBAREA MARKET VALUE
BAS	2,447	100	2019	2,447	340,100
FGR	552	55	2019	304	42,252
FOP	176	30	2019	53	7,366
FOP	338	30	2019	101	14,038
TOTALS	3,513			2,905	403,755

MARKET ADJUSTMENTS

TYPE	MDL	EFF. AREA	TOT ADJ PTS	EFF. BASE RATE	REPL. COST NEW	AYB	EYB	ECON	FNCT		NORM	% COND
0900	01	2,905	102.5540	142.55	414,108	2019	2019	0	0	0	2.50	97.50

1 SNGL FAM 100% - 2021 Heated Area: 2447 HX Base Yr 2021

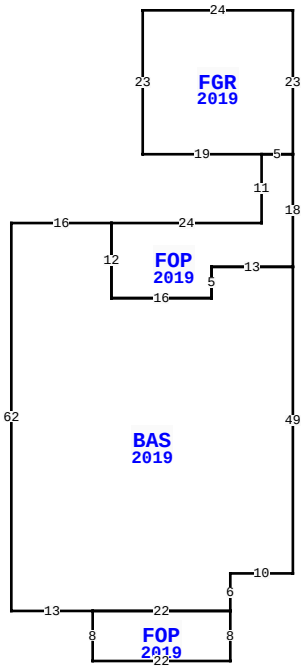

237 FLOCO AV, YULEE

BLD DATE	04/04/2022 NW	LGL DATE	
XF DATE		LAND DATE	
INC DATE		AG DATE	

NASSAU COUNTY PROPERTY — VALUATION SUMMARY

VALUATION BY		STANDARD
Tax Group: 4	Tax Dist:	
BUILDING MARKET VALUE		403,755
TOTAL MARKET OB/XF VALUE		0
TOTAL LAND VALUE - MARKET		60,000
TOTAL MARKET VALUE		463,755
SOH/AGL Deduction		224,473
ASSESSED VALUE		239,282
TOTAL EXEMPTION VALUE	HX HB	51,411
BASE TAXABLE VALUE		187,871
TOTAL JUST VALUE		463,755
NCON VALUE		0
INCOME VALUE		
PREVIOUS YEAR MKT VALUE		449,109

PERMIT NUM	DESCRIPTION	AMT	ISSUED
18010939	NEW CONSTR	331,738	10/18/2018

SALES DATA

OFF RECORD Number	DATE	TYPE INST	Q / U	V / I	RSN CD	SALE PRICE
2415/1550	12/09/2020	WD	Q	I	02	385,000
GRANTOR: BRIDGEMARK HOMES LLC						
GRANTEE: HARBISON DENNIS & R						
2397/1680	10/02/2020	SW	Q	I	01	256,400
GRANTOR: D S WARE HOMES LLC						
GRANTEE: BRIDGEMARK HOMES LL						

BUILDING NOTES

BUILDING DIMENSIONS

FGR=[YR=2019] W24 S23 E19 FOP=[YR=2019] S11 W24
BAS=[YR=2019] W16 S62 E13 FOP=[YR=2019] S8 E22 N8 W22 $ E22
N6 E10 N49 W13 S5 W16 N12 $ S12 E16 N5 E13 N18 W5 $ E5 N23 $.

EXTRA FEATURES

LN	OB/XF CODE	DESCRIPTION	BLD	CAP	L	W	UNITS	UT	Adj R	ADJ UNIT PRICE	ORIG COND	YEAR ON	YEAR ACTUAL	Q	% COND	OB/XF MKT VALUE	NOTES

LAND DESCRIPTION — TOTAL OB/XF 0

LN	USE CODE	CLS	LAND USE DESCRIPTION	CAP	RD	LOC ZONE	FRONT	DEPTH	TOT LND UTS	UNIT TYPE	DT	DPTH FACT	% COND	TOT ADJ	UNIT PRICE	ADJ UNIT PRICE	LAND VALUE	OTHER ADJUSTMENTS AND NOTES	YEAR	DENSITY	DECL	FRZ	YR	CONSRV
1	000100	C	RES	100		PD -	E 0.00	0.00	1.00	LT		1.00	1.00	1.00	60,000.00	60,000.00	60,000							

REVIEW DATE 01/01/2023 BY CD Total Acres: 0.00 Total Land Value: 60,000 Market: 0 Agricultural: 0 Common: 60,000 PRINTED 07/09/2026 BY SYS