LOT 22
ESMT PT OR 2176/356
EAST NASSAU-WILDLIGHT PHASE 1A

FINK RAYMOND P & MARIBETH
239 DAYDREAM AVE
YULEE, FL 32097

2026

44-2N-27-1000-0022-0000

NASSAU COUNTY PROPERTY

BUILDING CHARACTERISTICS

ELEMENT	CD	CONSTRUCTION
Exterior Wall	31	HARDIE BRD 100
Roof Structur	03	GABLE/HIP 100
Roof Cover	03	COMP SHNGL 100
Interior Wall	05	DRYWALL 100
Interior Floo	11	CLAY TILE 60
Interior Floo	14	CARPET 40
Air Condition	03	CENTRAL 100
Heating Type	04	AIR DUCTED 100
Bedrooms		3 100
Bathrooms		2 100
Frame	02	WOOD FRAME 100
Stories	1.	1. 100
Units		0 100
Occupancy	00	NONE 100
Quality	03	Quality Level 03
DOR CODE	0100	SINGLE FAMILY
MAP NUM		MKT AREA 04
NEIGHBORHOOD/LOC	4086.00	

AREA TYPE	TOTAL GROSS AREA	PCT OF BASE	YEAR	TOT ADJ AREA	SUBAREA MARKET VALUE
BAS	1,859	100	2018	1,859	284,442
FGR	500	55	2018	275	42,078
FOP	228	30	2018	68	10,404
FOP	269	30	2018	81	12,394
PTO	747	5	2025	37	5,661
TOTALS	3,603			2,320	354,978

MARKET ADJUSTMENTS

TYPE	MDL	EFF. AREA	TOT ADJ PTS	EFF. BASE RATE	REPL. COST NEW	AYB	EYB	ECON	FNCT		NORM	% COND
0900	01	2,320	113.4840	157.74	365,957	2018	2018	0	0	0	3.00	97.00

1 SNGL FAM 100% - 2020 Heated Area: 1859 HX Base Yr 2020

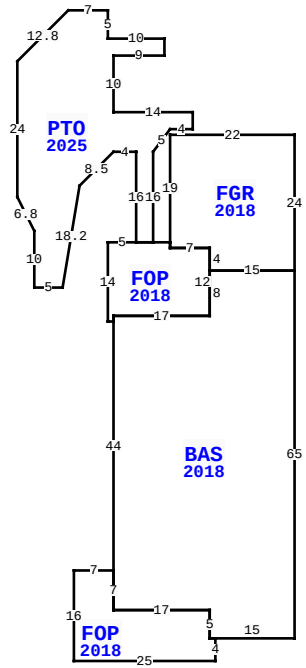

239 DAYDREAM AV, YULEE

BLD DATE		LGL DATE	
XF DATE		LAND DATE	
INC DATE		AG DATE	

NASSAU COUNTY PROPERTY — VALUATION SUMMARY

VALUATION BY		STANDARD
Tax Group: 4	Tax Dist:	
BUILDING MARKET VALUE		354,978
TOTAL MARKET OB/XF VALUE		0
TOTAL LAND VALUE - MARKET		60,000
TOTAL MARKET VALUE		414,978
SOH/AGL Deduction		88,910
ASSESSED VALUE		326,068
TOTAL EXEMPTION VALUE	HX HB	51,411
BASE TAXABLE VALUE		274,657
TOTAL JUST VALUE		414,978
NCON VALUE		0
INCOME VALUE		
PREVIOUS YEAR MKT VALUE		409,422

PERMIT NUM	DESCRIPTION	AMT	ISSUED
18009550	CO ISSUED	0	09/19/2018
B1800665	NEW CONSTR	250,072	01/22/2018

SALES DATA

OFF RECORD Number	DATE	TYPE INST	Q / U	V / I	RSN CD	SALE PRICE
2292/1827	7/17/2019	WD	Q	I	02	340,000
GRANTOR: D S WARE HOMES LLC						
GRANTEE: FINK RAYMOND P & MA						
2203/1180	6/13/2018	QC	U	V	11	100
GRANTOR: RAYDIENT LLC D/B/A RA						
GRANTEE: WILDLIGHT LLC ET AL						

BUILDING NOTES

BUILDING DIMENSIONS

BAS=[YR=2018;ORIG=-32,33] S44 S7 E17 S5 E15 N65 W15 S8 W17 S1 $
PTO=[YR=2025;ORIG=-25,19] W3 N16 W4 D6L6 D18L3 W5 N10 U6L3 N24 U9R9 E7 S5 E10 S3 W9 S10 E14 S3 W4 D4L3 S16 $
FGR=[YR=2018;ORIG=0,0] W22 S19 S1 E7 S4 E15 N24 $
FOP=[YR=2018;ORIG=-32,77] W7 S16 E25 N4 W1 N5 W17 N7 $
FOP=[YR=2018;ORIG=-22,19] W3 W3 W5 S14 E1 N1 E17 N12 W7 N1 $
.

EXTRA FEATURES

LN	OB/XF CODE	DESCRIPTION	BLD	CAP	L	W	UNITS	UT	Adj R	ADJ UNIT PRICE	ORIG COND	YEAR ON	YEAR ACTUAL	Q	% COND	OB/XF MKT VALUE	NOTES

LAND DESCRIPTION

TOTAL OB/XF 0

LN	USE CODE	CLS	LAND USE DESCRIPTION	CAP	RD	LOC ZONE	FRONT	DEPTH	TOT LND UTS	UNIT TYPE	DT	DPTH FACT	% COND	TOT ADJ	UNIT PRICE	ADJ UNIT PRICE	LAND VALUE	OTHER ADJUSTMENTS AND NOTES	YEAR	DENSITY	DECL	FRZ	YR	CONSRV
1	000100	C	RES	100		PD -	E 0.00	0.00	1.00	LT		1.00	1.00	1.00	60,000.00	60,000.00	60,000							

REVIEW DATE 01/01/2023 BY CD Total Acres: 0.00 Total Land Value: 60,000 Market: 0 Agricultural: 0 Common: 60,000 PRINTED 07/09/2026 BY SYS