BLOCK 1 LOT 30
LOFTON BLUFF 2 PB 4/92 & 93

FRIGOLA MICHELLE C
85232 AMANDA COURT
YULEE, FL 32097

2026

43-2N-27-4621-0001-0300

NASSAU COUNTY PROPERTY

BUILDING CHARACTERISTICS

ELEMENT	CD	CONSTRUCTION
Exterior Wall	20	FACE BRICK 90
Exterior Wall	05	AVERAGE 10
Roof Structur	03	GABLE/HIP 100
Roof Cover	03	COMP SHNGL 100
Interior Wall	05	DRYWALL 100
Interior Floo	15	HARDTILE 70
Interior Floo	14	CARPET 30
Air Condition	03	CENTRAL 100
Heating Type	04	AIR DUCTED 100
Bedrooms		4 100
Bathrooms		3 100
Frame	02	WOOD FRAME 100
Stories	1.	1. 100
Units		0 100
Occupancy	00	NONE 100
Quality	03	Quality Level 03
DOR CODE	0100	SINGLE FAMILY
MAP NUM		MKT AREA 04
NEIGHBORHOOD/LOC	4048.00	

AREA TYPE	TOTAL GROSS AREA	PCT OF BASE	YEAR	TOT ADJ AREA	SUBAREA MARKET VALUE
BAL	336	15	2007	50	5,852
BAS	2,382	100	2001	2,382	278,768
FDG	896	60	2001	538	62,963
FEP	240	80	2007	192	22,470
FGR	542	55	2001	298	34,876
FOP	50	30	2001	15	1,756
FUS	896	100	2002	896	104,860
STP	16	10	2001	2	234
STR	36	10	2001	4	468
STR	36	10	2001	4	468
TOTALS	5,430			4,381	512,714

MARKET ADJUSTMENTS

TYPE	MDL	EFF. AREA	TOT ADJ PTS	EFF. BASE RATE	REPL. COST NEW	AYB	EYB	ECON	FNCT		NORM	% COND
0900	01	4,381	101.9040	141.65	620,569	2001	2001	0	0	0	17.38	82.62

1 SNGL FAM 0% - 2026 Heated Area: 3278 HX Base Yr

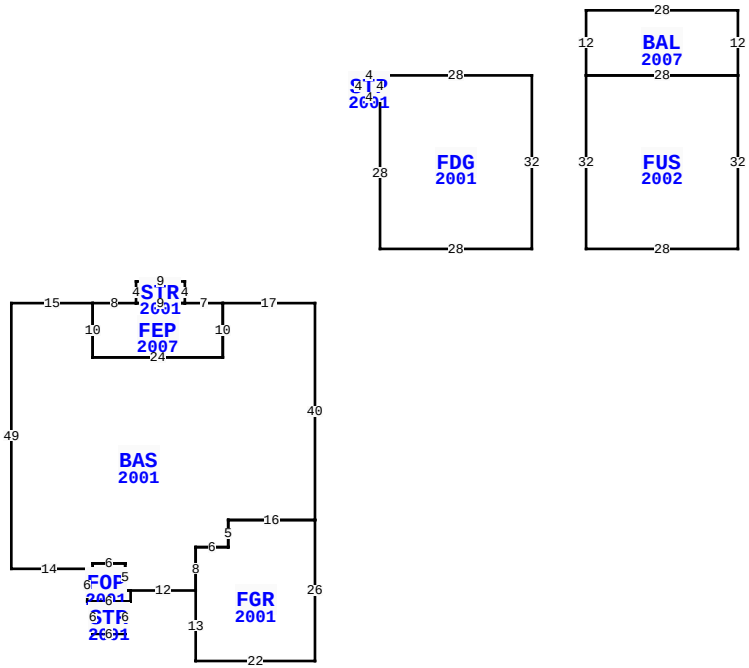

85232 AMANDA CT, YULEE

BLD DATE		LGL DATE	
XF DATE		LAND DATE	05/11/2026 MLU
INC DATE		AG DATE	

VALUATION SUMMARY

VALUATION BY	STANDARD
Tax Group: 4	Tax Dist:
BUILDING MARKET VALUE	512,714
TOTAL MARKET OB/XF VALUE	58,568
TOTAL LAND VALUE - MARKET	145,800
TOTAL MARKET VALUE	717,082
SOH/AGL Deduction	0
ASSESSED VALUE	717,082
TOTAL EXEMPTION VALUE	0
BASE TAXABLE VALUE	717,082
TOTAL JUST VALUE	717,082
NCON VALUE	0
INCOME VALUE	
PREVIOUS YEAR MKT VALUE	713,627

PERMIT NUM	DESCRIPTION	AMT	ISSUED
B19768	SWIM POOL	32,000	04/01/2007
P004122	NEW CONSTR	4,000	06/01/2000
B0007155	NEW CONSTR	187,300	05/01/2000

SALES DATA

OFF RECORD Number	DATE	TYPE INST	Q U	V I	RSN CD	SALE PRICE
2871/1777	5/20/2026	WD	Q	I	01	750,000
GRANTOR: SMITH JASON DANIEL						
GRANTEE: FRIGOLA MICHELLE C						
2841/1643	1/17/2026	FJ	U	I	11	0
GRANTOR: SMITH DOUGLAS B EST						
GRANTEE: SMITH JASON DANIEL						

BUILDING NOTES

EXTRA FEATURES

LN	OB/XF CODE	DESCRIPTION	BLD	CAP	L	W	UNITS	UT	Adj R	ADJ UNIT PRICE	ORIG COND	YEAR ON	YEAR ACTUAL	Q	% COND	OB/XF MKT VALUE	NOTES
2	0940	SHEDS/PORT	0	0	16	6	96.00	SF	30.00	30.00	100	2000	2000	3	20	576	
3	0860	POOL/SPA	0	0	0	0	1.00	UT	50,000.00	50,000.00	100	2007	2007	04	85	42,500	
5	0920	CWALL-WD/M	0	0	0	0	154.00	LF	390.00	390.00	100	2003	2003	3	20	12,012	
6	0300	BOAT DCK W	0	0	75	4	300.00	SF	40.00	40.00	100	2003	2003	3	29	3,480	

BUILDING DIMENSIONS

BAS=[YR=2001;ORIG=0,0] W17 S10 W24 N10 W15 S49 E14 E1 N1 E6 S5 E1 E12 N8 E6 N5 E16 N40 $
FDG=[YR=2001;ORIG=12,-42] E28 S32 W28 N28 N4 $
FUS=[YR=2002;ORIG=50,-10] N32 E28 S32 W28 $
FGR=[YR=2001;ORIG=-22,53] S13 E22 N26 W16 S5 W6 S8 $
BAL=[YR=2007;ORIG=50,-42] N12 E28 S12 W28 $
FEP=[YR=2007;ORIG=-17,0] W7 W9 W8 S10 E24 N10 $
FOP=[YR=2001;ORIG=-42,49] S6 E1 E6 E1 N2 W1 N5 W6 S1 W1 $
STR=[YR=2001;ORIG=-24,0] N4 W9 S4 E9 $
STR=[YR=2001;ORIG=-41,55] S6 E6 N6 W6 $
STP=[YR=2001;ORIG=8,-42] E4 S4 W4 N4 $
.

LAND DESCRIPTION

TOTAL OB/XF 58,568

LN	USE CODE	CLS	LAND USE DESCRIPTION	CAP	RD	LOC ZONE	FRONT	DEPTH	TOT LND UTS	UNIT TYPE	DT	DPTH FACT	% COND	TOT ADJ	UNIT PRICE	ADJ UNIT PRICE	LAND VALUE	OTHER ADJUSTMENTS AND NOTES	YEAR	DENSITY	DECL	FRZ	YR	CONSRV
1	000116	C	RES MARSH	0	0006	OR	0.00	0.00	1.08	AC		1.00	1.00	1.00	135,000.00	135,000.00	145,800							

REVIEW DATE 01/01/2023 BY CD Total Acres: 1.08 Total Land Value: 145,800 Market: 0 Agricultural: 0 Common: 145,800 PRINTED 07/09/2026 BY SYS