BLOCK 1 LOT 4
LOFTON BLUFF 2 PB 4/92 & 93

BERRYMAN RICHARD W & NANCY M
85790 BLACKMON RD
YULEE, FL 32097

2026

43-2N-27-4621-0001-0040

BUILDING CHARACTERISTICS

ELEMENT	CD	CONSTRUCTION
Exterior Wall	11	BD/BTN AVG 100
Roof Structur	03	GABLE/HIP 100
Roof Cover	03	COMP SHNGL 100
Interior Wall	05	DRYWALL 100
Interior Floo	13	LVT/LAMNT 100
Air Condition	03	CENTRAL 100
Heating Type	04	AIR DUCTED 100
Bedrooms		3 100
Bathrooms		2.5 100
Frame	02	WOOD FRAME 100
Stories	1.	1. 100
Units		0 100
Quality	03	Quality Level 03

DOR CODE 0100 SINGLE FAMILY
MAP NUM | MKT AREA 04
NEIGHBORHOOD/LOC 4048.00

AREA TYPE	TOTAL GROSS AREA	PCT OF BASE	YEAR	TOT ADJ AREA	SUBAREA MARKET VALUE
BAS	2,611	100	2025	2,611	415,307
FGR	288	55	2025	158	25,132
FGR	608	55	2025	334	53,126
FOP	184	30	2025	55	8,748
FOP	1,054	30	2025	316	50,263
FSP	604	40	2025	242	38,493
STR	16	10	2025	2	318
STR	122	10	2025	12	1,908
TOTALS	5,487			3,730	593,297

MARKET ADJUSTMENTS

TYPE	MDL	EFF. AREA	TOT ADJ PTS	EFF. BASE RATE	REPL. COST NEW	AYB	EYB	ECON	FNCT		NORM	% COND
0500	01	3,730	96.3000	159.86	596,278	2024	2024	0	0	0	0.50	99.50

1 SFR CUST 100% - 2026 Heated Area: 2611 HX Base Yr 2026

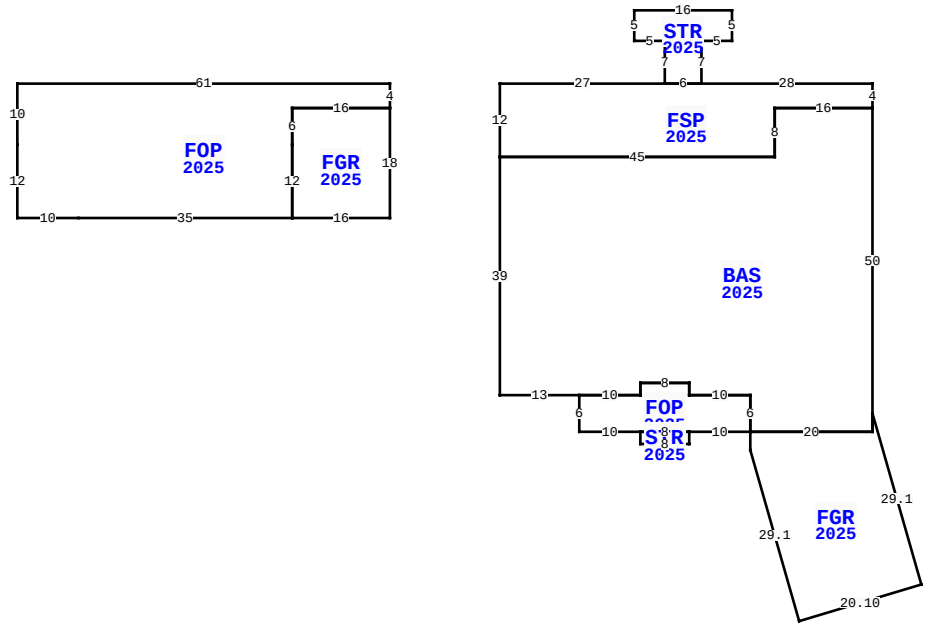

85790 BLACKMON RD, YULEE

BLD DATE		LGL DATE	
XF DATE		LAND DATE	05/11/2026 MLU
INC DATE		AG DATE	

NASSAU COUNTY PROPERTY

PAGE 1 of 2 4

VALUATION SUMMARY

VALUATION BY		STANDARD
Tax Group: 4	Tax Dist:	
BUILDING MARKET VALUE		625,619
TOTAL MARKET OB/XF VALUE		7,534
TOTAL LAND VALUE - MARKET		277,500
TOTAL MARKET VALUE		910,653
SOH/AGL Deduction		52,634
ASSESSED VALUE		858,019
TOTAL EXEMPTION VALUE	HX HB	51,411
BASE TAXABLE VALUE		806,608
TOTAL JUST VALUE		910,653
NCON VALUE		32,322
INCOME VALUE		
PREVIOUS YEAR MKT VALUE		942,779

PERMIT NUM	DESCRIPTION	AMT	ISSUED
CO240011712	REPLACEMENT SFR T	498,434	10/17/2024
230012829	H2625 G593 P794	498,434	10/05/2023
8269	REPAIR/RRF	700	07/28/1992
80000	XFOB	10,608	04/14/1992
3331	GARAGE	12,584	04/23/1986

SALES DATA

OFF RECORD Number	DATE	TYPE INST	Q / U	V / I	RSN CD	SALE PRICE
2517/0762	11/30/2021	WD	Q	I	01	440,000
GRANTOR: DUFRESNE MARK R & MAR						
GRANTEE: BERRYMAN RICHARD W						
2181/1994	3/05/2018	WD	Q	I	01	335,000
GRANTOR: STEPHENS JOSEPH W JR						
GRANTEE: DUFRESNE MARK R & M						

BUILDING NOTES

BUILDING DIMENSIONS

BAS=[YR=2025;ORIG=40,51] N39 E45 N8 E16 S50 S3 W20 N6 W10 N2 W8 S2 W10 W13 $
FOP=[YR=2025;ORIG=6,22] W35 W10 N12 N10 E61 S4 W16 S6 S12 $
FGR=[YR=2025;ORIG=81,60] N3 E20 N3 D28R8 D6L20 U28L8 $
FSP=[YR=2025;ORIG=101,0] W28 W6 W27 S12 E45 N8 E16 N4 $
FGR=[YR=2025;ORIG=22,4] W16 S6 S12 E16 N18 $
FOP=[YR=2025;ORIG=53,57] N6 E10 N2 E8 S2 E10 S6 W10 W8 W10 $
STR=[YR=2025;ORIG=67,0] N7 W5 N5 E16 S5 W5 S7 W6 $
STR=[YR=2025;ORIG=63,57] E8 S2 W8 N2 $
.

EXTRA FEATURES

LN	OB/XF CODE	DESCRIPTION	BLD	CAP	L	W	UNITS	UT	Adj R	ADJ UNIT PRICE	ORIG COND	YEAR ON	YEAR ACTUAL	Q	% COND	OB/XF MKT VALUE	NOTES
1	0300	BOAT DCK W	0	100	165	4	660.00	SF	40.00	40.00	100	1982	1982	3	20	5,280	
3	0350	CARPORT WD	0	100	12	14	168.00	SF	13.00	13.00	100	1997	1997	3	20	437	
4	0310	AL GANG WY	0	100	0	0	20.00	LF	115.00	115.00	100	1997	1997	3	20	460	
5	0303	FLT DOCK W	0	100	20	8	160.00	SF	26.00	26.00	100	1997	1997	3	23	957	
7	0317	DCK PLNG W	0	100	0	0	2.00	UT	1,000.00	1,000.00	100	1997	1997	3	20	400	

LAND DESCRIPTION

TOTAL OB/XF 7,534

LN	USE CODE	CLS	LAND USE DESCRIPTION	CAP	RD	LOC ZONE	FRONT	DEPTH	TOT LND UTS	UNIT TYPE	DT	DPTH FACT	% COND	TOT ADJ	UNIT PRICE	ADJ UNIT PRICE	LAND VALUE	OTHER ADJUSTMENTS AND NOTES	YEAR	DENSITY	DECL	FRZ	YR	CONSRV
1	000131	C	RES CREEK	100	0006	OR	0.00	0.00	185.00	FF		1.00	1.00	1.00	1,500.00	1,500.00	277,500							

REVIEW DATE 01/16/2026 BY KWX Total Acres: 0.00 Total Land Value: 277,500 Market: 0 Agricultural: 0 Common: 277,500 PRINTED 07/09/2026 BY SYS

BLOCK 1 LOT 4
LOFTON BLUFF 2 PB 4/92 & 93

BERRYMAN RICHARD W & NANCY M
85790 BLACKMON RD
YULEE, FL 32097

2026

43-2N-27-4621-0001-0040

BUILDING CHARACTERISTICS

ELEMENT	CD	CONSTRUCTION
Exterior Wall	25	MOD METAL 100
Roof Structur	10	STEEL FRME 100
Roof Cover	12	MODULAR MT 100
Interior Wall	07	NONE 100
Interior Floo	03	CONC FINSH 100
Air Condition	01	NONE 100
Heating Type	01	NONE 100
Bedrooms		0 100
Bathrooms		0 100
Frame	05	STEEL 100
Quality	06	Quality Level 06
DOR CODE	0100	SINGLE FAMILY
MAP NUM		MKT AREA 04
NEIGHBORHOOD/LOC	4048.00	

AREA TYPE	TOTAL GROSS AREA	PCT OF BASE	YEAR	TOT ADJ AREA	SUBAREA MARKET VALUE
BAS	1,320	100	2026	1,320	30,474
FCP	320	25	2026	80	1,847
TOTALS	1,640			1,400	32,322

MARKET ADJUSTMENTS

TYPE	MDL	EFF. AREA	TOT ADJ PTS	EFF. BASE RATE	REPL. COST NEW	AYB	EYB	ECON	FNCT		NORM	% COND
6500	01	1,400	59.8000	23.32	32,648	2025	2025	0	0	0	1.00	99.00

2 GARAGE RES 100% - 2026 Heated Area: 1320 HX Base Yr 2026

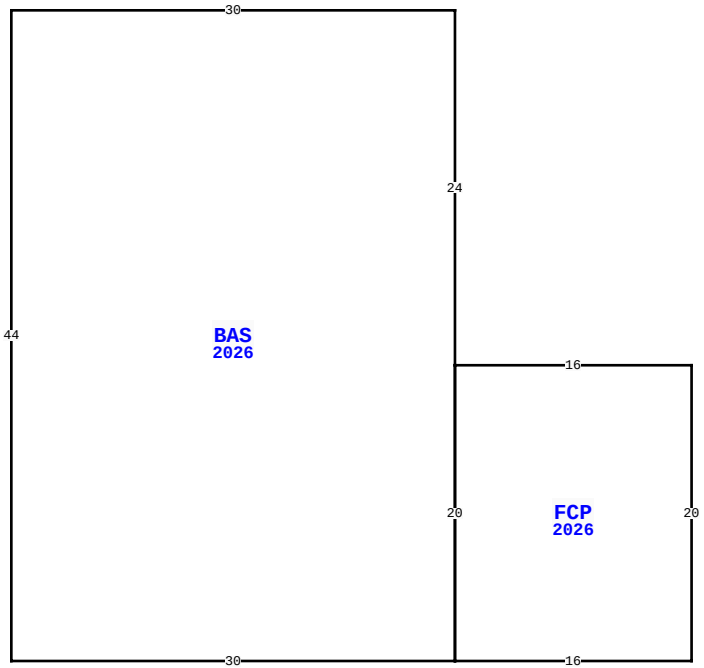

85790 BLACKMON RD, YULEE

BLD DATE		LGL DATE	
XF DATE		LAND DATE	05/11/2026 MLU
INC DATE		AG DATE	

NASSAU COUNTY PROPERTY

VALUATION SUMMARY

VALUATION BY		STANDARD
Tax Group: 4	Tax Dist:	
BUILDING MARKET VALUE		625,619
TOTAL MARKET OB/XF VALUE		7,534
TOTAL LAND VALUE - MARKET		277,500
TOTAL MARKET VALUE		910,653
SOH/AGL Deduction		52,634
ASSESSED VALUE		858,019
TOTAL EXEMPTION VALUE	HX HB	51,411
BASE TAXABLE VALUE		806,608
TOTAL JUST VALUE		910,653
NCON VALUE		32,322
INCOME VALUE		
PREVIOUS YEAR MKT VALUE		942,779

PERMIT NUM	DESCRIPTION	AMT	ISSUED

SALES DATA

OFF RECORD Number	DATE	TYPE INST	Q / U	V / I	RSN CD	SALE PRICE
2517/0762	11/30/2021	WD	Q	I	01	440,000
GRANTOR: DUFRESNE MARK R & MAR						
GRANTEE: BERRYMAN RICHARD W						
2181/1994	3/05/2018	WD	Q	I	01	335,000
GRANTOR: STEPHENS JOSEPH W JR						
GRANTEE: DUFRESNE MARK R & M						

BUILDING NOTES

BUILDING DIMENSIONS

BAS=[YR=2026;ORIG=30,10] E30 S24 S20 W30 N44 $
FCP=[YR=2026;ORIG=60,34] E16 S20 W16 N20 $
.

EXTRA FEATURES

LN	OB/XF CODE	DESCRIPTION	BLD	CAP	L	W	UNITS	UT	Adj R	ADJ UNIT PRICE	ORIG COND	YEAR ON	YEAR ACTUAL	Q	% COND	OB/XF MKT VALUE	NOTES

LAND DESCRIPTION

TOTAL OB/XF 0

LN	USE CODE	CLS	LAND USE DESCRIPTION	CAP	RD	LOC ZONE	FRONT	DEPTH	TOT LND UTS	UNIT TYPE	DT	DPTH FACT	% COND	TOT ADJ	UNIT PRICE	ADJ UNIT PRICE	LAND VALUE	OTHER ADJUSTMENTS AND NOTES	YEAR	DENSITY	DECL	FRZ	YR	CONSRV

REVIEW DATE 01/16/2026 BY KWX Total Acres: 0.00 Total Land Value: 277,500 Market: 0 Agricultural: 0 Common: 277,500 PRINTED 07/09/2026 BY SYS