LOT 52
VILLAGES OF WOODBRIDGE PHASE 5
OR 2554/1700

DUFOUR RYAN CHRISTOPHER
95328 JURA CT
FERNANDINA BEACH, FL 32034

2026

42-2N-28-1142-0052-0000

BUILDING CHARACTERISTICS

ELEMENT	CD	CONSTRUCTION
Exterior Wall	31	HARDIE BRD 100
Roof Structur	03	GABLE/HIP 100
Roof Cover	03	COMP SHNGL 100
Interior Wall	05	DRYWALL 100
Interior Floo	13	LVT/LAMNT 50
Interior Floo	14	CARPET 50
Air Condition	03	CENTRAL 100
Heating Type	04	AIR DUCTED 100
Bedrooms		3 100
Bathrooms		2 100
Frame	02	WOOD FRAME 100
Stories	1.	1. 100
Units		0 100
Quality	03	Quality Level 03
DOR CODE	0100	SINGLE FAMILY
MAP NUM		MKT AREA 04
NEIGHBORHOOD/LOC	4068.200	

AREA TYPE	TOTAL GROSS AREA	PCT OF BASE	YEAR	TOT ADJ AREA	SUBAREA MARKET VALUE
BAS	1,602	100	2023	1,602	180,423
FGR	581	55	2023	320	36,040
FOP	43	30	2023	13	1,464
FOP	160	30	2023	48	5,406
TOTALS	2,386			1,983	223,334

MARKET ADJUSTMENTS

TYPE	MDL	EFF. AREA	TOT ADJ PTS	EFF. BASE RATE	REPL. COST NEW	AYB	EYB	ECON	FNCT		NORM	% COND
0100	01	1,983	107.8000	113.19	224,456	2023	2023	0	0	0	0.50	99.50

1 SINGLE FAM 100% - 2025 Heated Area: 1602 HX Base Yr

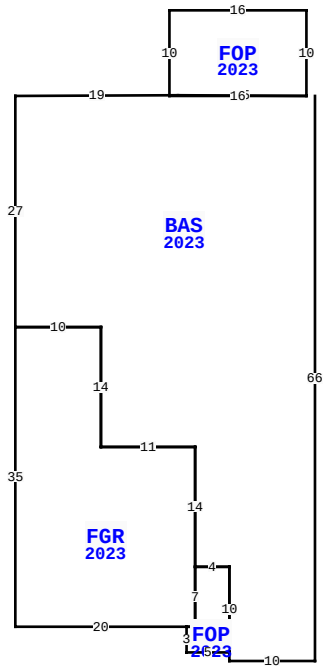

95328 JURA CT, FERNANDINA BEACH

BLD DATE		LGL DATE	
XF DATE		LAND DATE	04/25/2025 MLU
INC DATE		AG DATE	

NASSAU COUNTY PROPERTY

PAGE 1 of 1 4

VALUATION SUMMARY

VALUATION BY		STANDARD
Tax Group: 4	Tax Dist:	
BUILDING MARKET VALUE		223,334
TOTAL MARKET OB/XF VALUE		0
TOTAL LAND VALUE - MARKET		85,000
TOTAL MARKET VALUE		308,334
SOH/AGL Deduction		0
ASSESSED VALUE		308,334
TOTAL EXEMPTION VALUE	13	308,334
BASE TAXABLE VALUE		0
TOTAL JUST VALUE		308,334
NCON VALUE		0
INCOME VALUE		
PREVIOUS YEAR MKT VALUE		323,128

PERMIT NUM	DESCRIPTION	AMT	ISSUED
B230008666		313,998	07/06/2023
230003020			

SALES DATA

OFF RECORD Number	DATE	TYPE INST	Q / U	V / I	RSN CD	SALE PRICE
2690/1196	1/19/2024	SW	Q	I	01	416,000
GRANTOR: RICHMOND AMERICAN HOM						
GRANTEE: DUFOUR RYAN CHRISTO						
2650/1706	6/26/2023	SW	Q	V	05	845,000
GRANTOR: WOODBRIDGE NASSAU LLC						
GRANTEE: RICHMOND AMERICAN H						

BUILDING NOTES

BUILDING DIMENSIONS

BAS=[YR=2023;ORIG=75,0] U0.1L15 D0.1L19 S27 E10 S14 E11 S14 E4 S10 S1 E10 N66 $
FGR=[YR=2023;ORIG=51,27] W10 S35 E20 E1 N7 N14 W11 N14 $
FOP=[YR=2023;ORIG=75,0] W16 N10 E16 S10 $
FOP=[YR=2023;ORIG=66,65] W5 N3 E1 N7 E4 S10 $
.

EXTRA FEATURES

LN	OB/XF CODE	DESCRIPTION	BLD	CAP	L	W	UNITS	UT	Adj R	ADJ UNIT PRICE	ORIG COND	YEAR ON	YEAR ACTUAL	Q	% COND	OB/XF MKT VALUE	NOTES

LAND DESCRIPTION

TOTAL OB/XF 0

LN	USE CODE	CLS	LAND USE DESCRIPTION	CAP	RD	LOC ZONE	FRONT	DEPTH	TOT LND UTS	UNIT TYPE	DT	DPTH FACT	% COND	TOT ADJ	UNIT PRICE	ADJ UNIT PRICE	LAND VALUE	OTHER ADJUSTMENTS AND NOTES	YEAR	DENSITY	DECL	FRZ	YR	CONSRV
1	000100	C	RES	100		PUD	0.00	0.00	1.00	LT		1.00	1.00	1.00	85,000.00	85,000.00	85,000							

REVIEW DATE 08/11/2023 BY DJ Total Acres: 0.00 Total Land Value: 85,000 Market: 0 Agricultural: 0 Common: 85,000 PRINTED 07/09/2026 BY SYS