LOT 40
VILLAGES OF WOODBRIDGE PHASE 5
OR 2554/1700

MEDEIROS MARTY WILLIAM/MEDEIROS MALEA PAIGE
95408 CORSICA COURT
FERNANDINA BEACH, FL 32034

**2026**

**42-2N-28-1142-0040-0000**

## BUILDING CHARACTERISTICS

| ELEMENT | CD | CONSTRUCTION |
|---|---|---|
| Exterior Wall | 31 | HARDIE BRD 100 |
| Roof Structur | 03 | GABLE/HIP 100 |
| Roof Cover | 03 | COMP SHNGL 100 |
| Interior Wall | 05 | DRYWALL 100 |
| Interior Floo | 08 | SHT VINYL 100 |
| Interior Kitch | NEW | N/A 0 |
| Air Condition | 03 | CENTRAL 100 |
| Heating Type | 04 | AIR DUCTED 100 |
| Bedrooms | | 3 100 |
| Bathrooms | | 2 100 |
| Frame | 02 | WOOD FRAME 100 |
| Stories | 1. | 1. 100 |
| Units | | 0 100 |
| Quality | 03 | Quality Level 03 |
| DOR CODE | 0100 | SINGLE FAMILY |
| MAP NUM | | MKT AREA 04 |
| NEIGHBORHOOD/LOC | 4068.200 | |

| AREA TYPE | TOTAL GROSS AREA | PCT OF BASE | YEAR | TOT ADJ AREA | SUBAREA MARKET VALUE |
|---|---|---|---|---|---|
| BAS | 1,601 | 100 | 2024 | 1,601 | 180,311 |
| FGR | 581 | 55 | 2024 | 320 | 36,040 |
| FOP | 48 | 30 | 2024 | 14 | 1,577 |
| FOP | 160 | 30 | 2024 | 48 | 5,406 |
| TOTALS | 2,390 | | | 1,983 | 223,334 |

## MARKET ADJUSTMENTS

| TYPE | MDL | EFF. AREA | TOT ADJ PTS | EFF. BASE RATE | REPL. COST NEW | AYB | EYB | ECON | FNCT | | NORM | % COND |
|---|---|---|---|---|---|---|---|---|---|---|---|---|
| 0100 | 01 | 1,983 | 107.8000 | 113.19 | 224,456 | 2023 | 2023 | 0 | 0 | 0 | 0.50 | 99.50 |

1 SINGLE FAM 0% - 2024 Heated Area: 1601 HX Base Yr

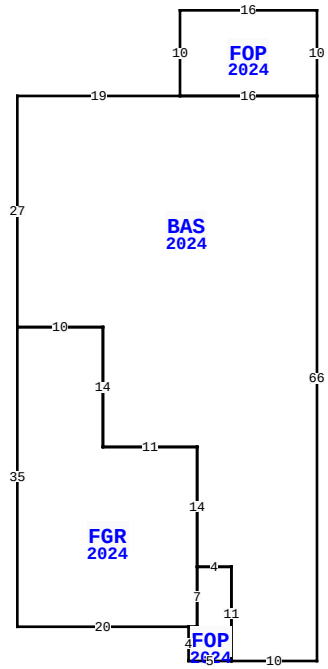


95408 CORSICA CT, FERNANDINA BEACH

| | | | |
|---|---|---|---|
| BLD DATE | | LGL DATE | |
| XF DATE | | LAND DATE | 04/25/2025 MLU |
| INC DATE | | AG DATE | |

## NASSAU COUNTY PROPERTY

PAGE 1 of 1 4

### VALUATION SUMMARY

| | |
|---|---|
| VALUATION BY | STANDARD |
| Tax Group: 4 | Tax Dist: |
| BUILDING MARKET VALUE | 223,334 |
| TOTAL MARKET OB/XF VALUE | 0 |
| TOTAL LAND VALUE - MARKET | 85,000 |
| TOTAL MARKET VALUE | 308,334 |
| SOH/AGL Deduction | 0 |
| ASSESSED VALUE | 308,334 |
| TOTAL EXEMPTION VALUE | 0 |
| BASE TAXABLE VALUE | 308,334 |
| TOTAL JUST VALUE | 308,334 |
| NCON VALUE | 0 |
| INCOME VALUE | |
| PREVIOUS YEAR MKT VALUE | 323,664 |

| PERMIT NUM | DESCRIPTION | AMT | ISSUED |
|---|---|---|---|
| 22016353 | NEW CONSTR | 311,929 | 10/31/2022 |

## SALES DATA

| OFF RECORD Number | DATE | TYPE INST | Q U | V I | RSN CD | SALE PRICE |
|---|---|---|---|---|---|---|
| 2670/1610 | 9/28/2023 | SW | Q | I | 01 | 354,200 |
| GRANTOR: RICHMOND AMERICAN HOM | | | | | | |
| GRANTEE: MEDEIROS MARTY WILL | | | | | | |
| 2598/0618 | 10/20/2022 | SW | Q | V | 05 | 728,400 |
| GRANTOR: WOODBRIDGE NASSAU LLC | | | | | | |
| GRANTEE: RICHMOND AMERICAN H | | | | | | |

## BUILDING NOTES

## BUILDING DIMENSIONS

BAS=[YR=2024;ORIG=50,10] E19 E16 S66 W10 N11 W4 N14 W11 N14 W10 N27 $
FOP=[YR=2024;ORIG=69,0] E16 S10 W16 N10 $
FGR=[YR=2024;ORIG=50,37] E10 S14 E11 S14 S7 W1 W20 N35 $
FOP=[YR=2024;ORIG=71,65] E4 S11 W5 N4 E1 N7 $
.

## EXTRA FEATURES

| LN | OB/XF CODE | DESCRIPTION | BLD | CAP | L | W | UNITS | UT | Adj R | ADJ UNIT PRICE | ORIG COND | YEAR ON | YEAR ACTUAL | Q | % COND | OB/XF MKT VALUE | NOTES |
|---|---|---|---|---|---|---|---|---|---|---|---|---|---|---|---|---|---|

## LAND DESCRIPTION

TOTAL OB/XF 0

| LN | USE CODE | CLS | LAND USE DESCRIPTION | CAP | RD | LOC ZONE | FRONT | DEPTH | TOT LND UTS | UNIT TYPE | DT | DPTH FACT | % COND | TOT ADJ | UNIT PRICE | ADJ UNIT PRICE | LAND VALUE | OTHER ADJUSTMENTS AND NOTES | YEAR | DENSITY | DECL | FRZ | YR | CONSRV |
|---|---|---|---|---|---|---|---|---|---|---|---|---|---|---|---|---|---|---|---|---|---|---|---|---|
| 1 | 000134 | C | RES POND | 0 | | PUD | 0.00 | 0.00 | 1.00 | LT | | 1.00 | 1.00 | 1.00 | 85,000.00 | 85,000.00 | 85,000 | | | | | | | |

REVIEW DATE 11/27/2023 BY DJ Total Acres: 0.00 Total Land Value: 85,000 Market: 0 Agricultural: 0 Common: 85,000 PRINTED 07/09/2026 BY SYS