LOT 99
VILLAGES OF WOODBRIDGE
PHASE IV B OR 2438/574

REECE BARBARA J
94975 COLNAGO COURT
FERNANDINA BEACH, FL 32097

2026

42-2N-28-1141-0099-0000

BUILDING CHARACTERISTICS

ELEMENT	CD	CONSTRUCTION
Exterior Wall	31	HARDIE BRD 100
Roof Structur	03	GABLE/HIP 100
Roof Cover	03	COMP SHNGL 100
Interior Wall	05	DRYWALL 100
Interior Floo	13	LVT/LAMNT 50
Interior Floo	14	CARPET 50
Air Condition	03	CENTRAL 100
Heating Type	04	AIR DUCTED 100
Bedrooms		3 100
Bathrooms		2 100
Frame	02	WOOD FRAME 100
Stories	1.	1. 100
Units		0 100
Occupancy	00	NONE 100
Quality	03	Quality Level 03

DOR CODE 0100 SINGLE FAMILY
MAP NUM | MKT AREA 04
NEIGHBORHOOD/LOC 4068.100

AREA TYPE	TOTAL GROSS AREA	PCT OF BASE	YEAR	TOT ADJ AREA	SUBAREA MARKET VALUE
BAS	1,601	100	2022	1,601	181,037
FGR	581	55	2022	320	36,185
FOP	48	30	2022	14	1,583
FOP	160	30	2022	48	5,428
TOTALS	2,390			1,983	224,233

MARKET ADJUSTMENTS

TYPE	MDL	EFF. AREA	TOT ADJ PTS	EFF. BASE RATE	REPL. COST NEW	AYB	EYB	ECON	FNCT		NORM	% COND
0100	01	1,983	108.7800	114.22	226,498	2022	2022	0	0	0	1.00	99.00

1 SINGLE FAM 100% - 2026 Heated Area: 1601 HX Base Yr 2026

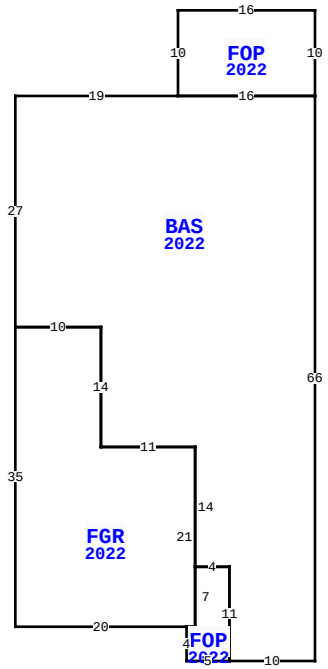

94975 COLNAGO CT, FERNANDINA BEACH

BLD DATE		LGL DATE	
XF DATE		LAND DATE	04/25/2025 MLU
INC DATE		AG DATE	

NASSAU COUNTY PROPERTY

PAGE 1 of 1 4

VALUATION SUMMARY

VALUATION BY		STANDARD
Tax Group: 4	Tax Dist:	
BUILDING MARKET VALUE		224,233
TOTAL MARKET OB/XF VALUE		0
TOTAL LAND VALUE - MARKET		85,000
TOTAL MARKET VALUE		309,233
SOH/AGL Deduction		40,200
ASSESSED VALUE		269,033
TOTAL EXEMPTION VALUE	HX HB	51,411
BASE TAXABLE VALUE		217,622
TOTAL JUST VALUE		309,233
NCON VALUE		0
INCOME VALUE		
PREVIOUS YEAR MKT VALUE		324,477

PERMIT NUM	DESCRIPTION	AMT	ISSUED
C2114323	CO ISSUED	0	06/24/2022
B2114323	NEW CONSTR	278,938	10/18/2021

SALES DATA

OFF RECORD Number	DATE	TYPE INST	Q U	V I	RSN CD	SALE PRICE
2804/1557	7/30/2025	WD	Q	I	01	339,000
GRANTOR: MILLER CORA PETERSON						
GRANTEE: REECE BARBARA J						
2597/1303	10/20/2022	WD	Q	I	01	375,000
GRANTOR: HUTCHISON ROBERT SHAW						
GRANTEE: MILLER CORA P & JEF						

BUILDING NOTES

BUILDING DIMENSIONS

FOP=[YR=2022] W16 S10 BAS=[YR=2022] W19 S27 FGR=[YR=2022] S35 E20 FOP=[YR=2022] S4 E5 N11 W4 S7 W1$ E1 N21 W11 N14 W10$ E10 S14 E11 S14 E4 S11 E10 N66 W16$ E16 N10$.

EXTRA FEATURES

LN	OB/XF CODE	DESCRIPTION	BLD	CAP	L	W	UNITS	UT	Adj R	ADJ UNIT PRICE	ORIG COND	YEAR ON	YEAR ACTUAL	Q	% COND	OB/XF MKT VALUE	NOTES

LAND DESCRIPTION

TOTAL OB/XF 0

LN	USE CODE	CLS	LAND USE DESCRIPTION	CAP	RD	LOC ZONE	FRONT	DEPTH	TOT LND UTS	UNIT TYPE	DT	DPTH FACT	% COND	TOT ADJ	UNIT PRICE	ADJ UNIT PRICE	LAND VALUE	OTHER ADJUSTMENTS AND NOTES	YEAR	DENSITY	DECL	FRZ	YR	CONSRV
1	000100	C	RES	100		PUD	0.00	0.00	1.00	LT		1.00	1.00	1.00	85,000.00	85,000.00	85,000							

REVIEW DATE 01/01/2023 BY CD Total Acres: 0.00 Total Land Value: 85,000 Market: 0 Agricultural: 0 Common: 85,000 PRINTED 07/09/2026 BY SYS