LOT 177
IN OR 1347/994
HICKORY VILLAGE #3 PB 6/372

**FELIX DEBORAH**
86111 KNOTTED OAK WAY
YULEE, FL 32097

**2026**

**42-2N-27-435H-0177-0000**

## BUILDING CHARACTERISTICS

| ELEMENT | CD | CONSTRUCTION |
|---|---|---|
| Exterior Wall | 10 | ABOVE AVG 70 |
| Exterior Wall | 16 | WD FR STUC 30 |
| Roof Structur | 03 | GABLE/HIP 100 |
| Roof Cover | 03 | COMP SHNGL 100 |
| Interior Wall | 05 | DRYWALL 100 |
| Interior Floo | 14 | CARPET 80 |
| Interior Floo | 08 | SHT VINYL 20 |
| Air Condition | 03 | CENTRAL 100 |
| Heating Type | 04 | AIR DUCTED 100 |
| Bedrooms | | 4 100 |
| Bathrooms | | 3 100 |
| Frame | 02 | WOOD FRAME 100 |
| Stories | 1. | 1. 100 |
| Units | | 0 100 |
| Occupancy | 00 | NONE 100 |
| Quality | 04 | Quality Level 04 |
| DOR CODE | 0100 | SINGLE FAMILY |
| MAP NUM | | MKT AREA 04 |
| NEIGHBORHOOD/LOC | 4047.00 | |

| AREA TYPE | TOTAL GROSS AREA | PCT OF BASE | YEAR | TOT ADJ AREA | SUBAREA MARKET VALUE |
|---|---|---|---|---|---|
| BAS | 247 | 100 | 2005 | 247 | 24,673 |
| BAS | 2,187 | 100 | 2005 | 2,187 | 218,462 |
| FGR | 428 | 55 | 2005 | 235 | 23,475 |
| FGR | 476 | 55 | 2005 | 262 | 26,172 |
| FOP | 36 | 30 | 2005 | 11 | 1,099 |
| FOP | 36 | 30 | 2005 | 11 | 1,099 |
| FOP | 70 | 30 | 2005 | 21 | 2,098 |
| FOP | 413 | 30 | 2005 | 124 | 12,386 |
| TOTALS | 3,893 | | | 3,098 | 309,462 |

## MARKET ADJUSTMENTS

| TYPE | MDL | EFF. AREA | TOT ADJ PTS | EFF. BASE RATE | REPL. COST NEW | AYB | EYB | ECON | FNCT | | NORM | % COND |
|---|---|---|---|---|---|---|---|---|---|---|---|---|
| 0100 | 01 | 3,098 | 105.2940 | 110.56 | 342,515 | 2005 | 2005 | 0 | 0 | 0 | 9.65 | 90.35 |

1 SINGLE FAM 100% - 2007 Heated Area: 2434 HX Base Yr 2007

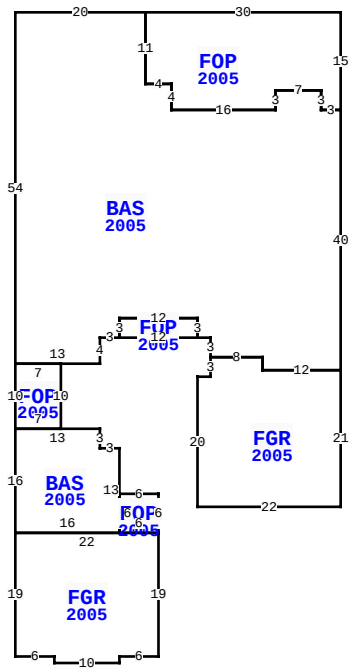


86111 KNOTTED OAK WAY, YULEE

| | | | |
|---|---|---|---|
| BLD DATE | 03/14/2023 NW | LGL DATE | |
| XF DATE | | LAND DATE | 03/27/2026 MLU |
| INC DATE | | AG DATE | |

## NASSAU COUNTY PROPERTY

PAGE 1 of 1 4

### VALUATION SUMMARY

| | | |
|---|---|---|
| VALUATION BY | | STANDARD |
| Tax Group: 4 | Tax Dist: | |
| BUILDING MARKET VALUE | | 309,462 |
| TOTAL MARKET OB/XF VALUE | | 1,050 |
| TOTAL LAND VALUE - MARKET | | 60,000 |
| TOTAL MARKET VALUE | | 370,512 |
| SOH/AGL Deduction | | 160,482 |
| ASSESSED VALUE | | 210,030 |
| TOTAL EXEMPTION VALUE | HX HB SX | 101,411 |
| BASE TAXABLE VALUE | | 108,619 |
| TOTAL JUST VALUE | | 370,512 |
| NCON VALUE | | 0 |
| INCOME VALUE | | |
| PREVIOUS YEAR MKT VALUE | | 387,412 |

| PERMIT NUM | DESCRIPTION | AMT | ISSUED |
|---|---|---|---|
| M0509214 | MECH OTHER | 0 | 02/01/2005 |
| E0414099 | ELEC OTHER | 2,000 | 12/01/2004 |
| B0413624 | NEW CONSTR | 200,730 | 09/01/2004 |

## SALES DATA

| OFF RECORD Number | DATE | TYPE INST | Q U | V I | RSN CD | SALE PRICE |
|---|---|---|---|---|---|---|
| 1347/0994 | 9/06/2005 | WD | Q | I | | 261,100 |
| GRANTOR: COPPENBARGER HOMES | | | | | | |
| GRANTEE: FELIX DEBORAH | | | | | | |
| 1229/1724 | 5/12/2004 | WD | U | V | 19 | 132,000 |
| GRANTOR: MARSH CREEK DEVELOPME | | | | | | |
| GRANTEE: COPPENBARGER HOMES | | | | | | |

## BUILDING NOTES

## BUILDING DIMENSIONS

FOP=[YR=2005] W30 BAS=[YR=2005] W20 S54 FOP=[YR=2005] S10 BAS=[YR=2005] S16 FGR=[YR=2005] S19 E6 S1 E10 N1 E6 N19 FOP=[YR=2005] N6 W6 S6 E6 $ W22 $ E16 N13 W3 N3 W13 $ E7 N10 W7 $ E13 N4 E3 FOP=[YR=2005] E12 N3 W12 S3 $ N3 E12 S3 E2 S3 FGR=[YR=2005] S3 W2 S20 E22 N21 W12 N2 W8 $ E8 S2 E12 N40 W3 N3 W7 S3 W16 N4 W4 N11 $ S11 E4 S4 E16 N3 E7 S3 E3 N15 $ .

## EXTRA FEATURES

| LN | OB/XF CODE | DESCRIPTION | BLD | CAP | L | W | UNITS | UT | Adj R | ADJ UNIT PRICE | ORIG COND | YEAR ON | YEAR ACTUAL | Q | % COND | OB/XF MKT VALUE | NOTES |
|---|---|---|---|---|---|---|---|---|---|---|---|---|---|---|---|---|---|
| 3 | 0600 | SUMMER KIT | 0 | 100 | 0 | 0 | 1.00 | UT | 5,000.00 | 5,000.00 | 100 | 2005 | 2005 | 3 | 21 | 1,050 | |

## LAND DESCRIPTION

TOTAL OB/XF 1,050

| LN | USE CODE | CLS | LAND USE DESCRIPTION | CAP | RD | LOC ZONE | FRONT | DEPTH | TOT LND UTS | UNIT TYPE | DT | DPTH FACT | % COND | TOT ADJ | UNIT PRICE | ADJ UNIT PRICE | LAND VALUE | OTHER ADJUSTMENTS AND NOTES | YEAR | DENSITY | DECL | FRZ | YR | CONSRV |
|---|---|---|---|---|---|---|---|---|---|---|---|---|---|---|---|---|---|---|---|---|---|---|---|---|
| 1 | 000100 | C | RES | 100 | 0003 | RSF-2 | 0.00 | 0.00 | 1.00 | LT | | 1.00 | 1.00 | 1.00 | 60,000.00 | 60,000.00 | 60,000 | | | | | | | |

REVIEW DATE 01/01/2023 BY CD Total Acres: 0.00 Total Land Value: 60,000 Market: 0 Agricultural: 0 Common: 60,000 PRINTED 07/09/2026 BY SYS