LOT 95
HICKORY VILLAGE #3 PB 6/372

LOPEZ-FOLEY FAMILY TRUST/LOPEZ HAIROLD CO-TRUSTEE
86036 RED HOLLY PL
YULEE, FL 32097

2026

42-2N-27-435H-0095-0000

NASSAU COUNTY PROPERTY

BUILDING CHARACTERISTICS

ELEMENT	CD	CONSTRUCTION
Exterior Wall	31	HARDIE BRD 70
Exterior Wall	16	WD FR STUC 30
Roof Structur	03	GABLE/HIP 100
Roof Cover	03	COMP SHNGL 100
Interior Wall	05	DRYWALL 100
Interior Floo	14	CARPET 70
Interior Floo	11	CLAY TILE 30
Air Condition	03	CENTRAL 100
Heating Type	04	AIR DUCTED 100
Bedrooms		4 100
Bathrooms		3 100
Frame	02	WOOD FRAME 100
Stories	1.	1. 100
Units		0 100
Occupancy	00	NONE 100
Quality	04	Quality Level 04
DOR CODE	0100	SINGLE FAMILY
MAP NUM		MKT AREA 04
NEIGHBORHOOD/LOC	4047.00	

AREA TYPE	TOTAL GROSS AREA	PCT OF BASE	YEAR	TOT ADJ AREA	SUBAREA MARKET VALUE
BAS	247	100	2005	247	25,504
BAS	2,187	100	2005	2,187	225,815
FEP	413	80	2013	330	34,073
FGR	241	55	2005	133	13,733
FGR	476	55	2005	262	27,053
FOP	36	30	2005	11	1,136
FOP	36	30	2005	11	1,136
FOP	70	30	2005	21	2,169
TOTALS	3,706			3,202	330,618

MARKET ADJUSTMENTS

TYPE	MDL	EFF. AREA	TOT ADJ PTS	EFF. BASE RATE	REPL. COST NEW	AYB	EYB	ECON	FNCT		NORM	% COND
0100	01	3,202	109.0614	114.51	366,661	2005	2005	0	0	0	9.83	90.17

1 SINGLE FAM 100% - 2025 Heated Area: 2434 HX Base Yr 2025

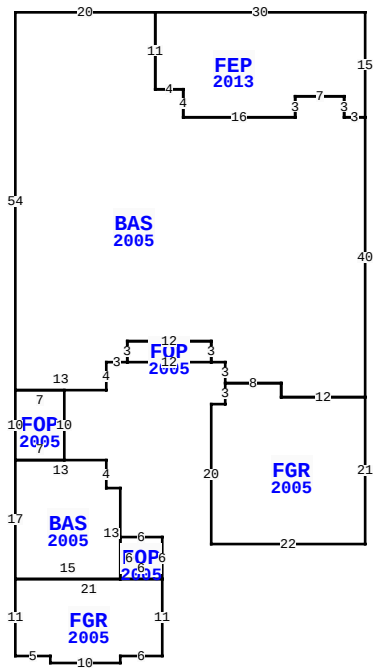

86036 RED HOLLY PL, YULEE

BLD DATE	03/14/2023 NW	LGL DATE	
XF DATE		LAND DATE	03/27/2026 MLU
INC DATE		AG DATE	

NASSAU COUNTY PROPERTY — VALUATION SUMMARY

VALUATION BY		STANDARD
Tax Group: 4	Tax Dist:	
BUILDING MARKET VALUE		330,618
TOTAL MARKET OB/XF VALUE		1,740
TOTAL LAND VALUE - MARKET		60,000
TOTAL MARKET VALUE		392,358
SOH/AGL Deduction		0
ASSESSED VALUE		392,358
TOTAL EXEMPTION VALUE	HX HB	51,411
BASE TAXABLE VALUE		340,947
TOTAL JUST VALUE		392,358
NCON VALUE		0
INCOME VALUE		
PREVIOUS YEAR MKT VALUE		416,048

PERMIT NUM	DESCRIPTION	AMT	ISSUED
B1327570	REMODEL	19,450	08/01/2013
B14570	NEW CONSTR	190,039	01/06/2006
M0509705	H/AC	0	05/01/2005
E14452	ELEC OTHER	2,000	02/01/2005
R07238	REPAIR/RRF	3,500	02/01/2005
P0508984	OTHER	0	02/01/2005

SALES DATA

OFF RECORD Number	DATE	TYPE INST	Q U	V I	RSN CD	SALE PRICE
2721/1478	6/27/2024	WD	U	I	11	100
GRANTOR: LOPEZ HAIROLD						
GRANTEE: LOPEZ-FOLEY FAMILY						
2713/455	5/20/2024	WD	Q	I	02	455,000
GRANTOR: DECLARATION OF TRUST						
GRANTEE: LOPEZ HAIROLD						

BUILDING NOTES

BUILDING DIMENSIONS

FEP=[YR=2013] W30 BAS=[YR=2005] W20 S54 FOP=[YR=2005] S10 BAS=[YR=2005] S17 FGR=[YR=2005] S11 E5 S1 E10 N1 E6 N11 FOP=[YR=2005] N6 W6 S6 E6$ W21$ E15 N13 W2 N4 W13$ E7 N10 W7$ E13 N4 E3 FOP=[YR=2005] E12 N3 W12 S3$ N3 E12 S3 E2 S3 FGR=[YR=2005] S3 W2 S20 E22 N21 W12 N2 W8$ E8 S2 E12 N40 W3 N3 W7 S3 W16 N4 W4 N11$ S11 E4 S4 E16 N3 E7 S3 E3 N15$.

EXTRA FEATURES

LN	OB/XF CODE	DESCRIPTION	BLD	CAP	L	W	UNITS	UT	Adj R	ADJ UNIT PRICE	ORIG COND	YEAR ON	YEAR ACTUAL	Q	% COND	OB/XF MKT VALUE	NOTES
1	0504	FP-ELECTRI	0	100	0	0	1.00	UT	2,000.00	2,000.00	100	2005	2005	3	87	1,740	

LAND DESCRIPTION

TOTAL OB/XF 1,740

LN	USE CODE	CLS	LAND USE DESCRIPTION	CAP	RD	LOC ZONE	FRONT	DEPTH	TOT LND UTS	UNIT TYPE	DT	DPTH FACT	% COND	TOT ADJ	UNIT PRICE	ADJ UNIT PRICE	LAND VALUE	OTHER ADJUSTMENTS AND NOTES	YEAR	DENSITY	DECL	FRZ	YR	CONSRV
1	000100	C	RES	100	0003	RSF-2	0.00	0.00	1.00	LT		1.00	1.00	1.00	60,000.00	60,000.00	60,000							

REVIEW DATE 05/21/2024 BY KWA Total Acres: 0.00 Total Land Value: 60,000 Market: 0 Agricultural: 0 Common: 60,000 PRINTED 07/09/2026 BY SYS