LOT 37
SANDY RIDGE OR 2638/638

ANDERSON ROSS & JENNIFER W
85334 SANDY RIDGE LOOP
YULEE, FL 32097

2026

42-2N-27-1095-0037-0000

BUILDING CHARACTERISTICS

ELEMENT	CD	CONSTRUCTION
Exterior Wall	31	HARDIE BRD 100
Roof Structur	03	GABLE/HIP 100
Roof Cover	03	COMP SHNGL 100
Interior Wall	05	DRYWALL 100
Interior Floo	14	CARPET 60
Interior Floo	11	CLAY TILE 40
Air Condition	03	CENTRAL 100
Heating Type	04	AIR DUCTED 100
Bedrooms		4 100
Bathrooms		3.5 100
Frame	02	WOOD FRAME 100
Stories	2.	2. 100
Units		0 100
Quality	01	Quality Level 01
DOR CODE	0100	SINGLE FAMILY
MAP NUM		MKT AREA 04
NEIGHBORHOOD/LOC	4096.00	

AREA TYPE	TOTAL GROSS AREA	PCT OF BASE	YEAR	TOT ADJ AREA	SUBAREA MARKET VALUE
BAS	1,618	100	2025	1,618	214,531
FGR	462	55	2025	254	33,678
FOP	113	30	2025	34	4,508
FOP	160	30	2025	48	6,364
FST	16	55	2025	9	1,193
FUS	1,147	100	2025	1,147	152,081
STR	48	10	2025	5	663
TOTALS	3,564			3,115	413,018

MARKET ADJUSTMENTS

TYPE	MDL	EFF. AREA	TOT ADJ PTS	EFF. BASE RATE	REPL. COST NEW	AYB	EYB	ECON	FNCT		NORM	% COND
0900	01	3,115	95.3856	132.59	413,018	2024	2024	0	0	0	0.00	100.00

1 SNGL FAM 100% - 2026 Heated Area: 2765 HX Base Yr 2026

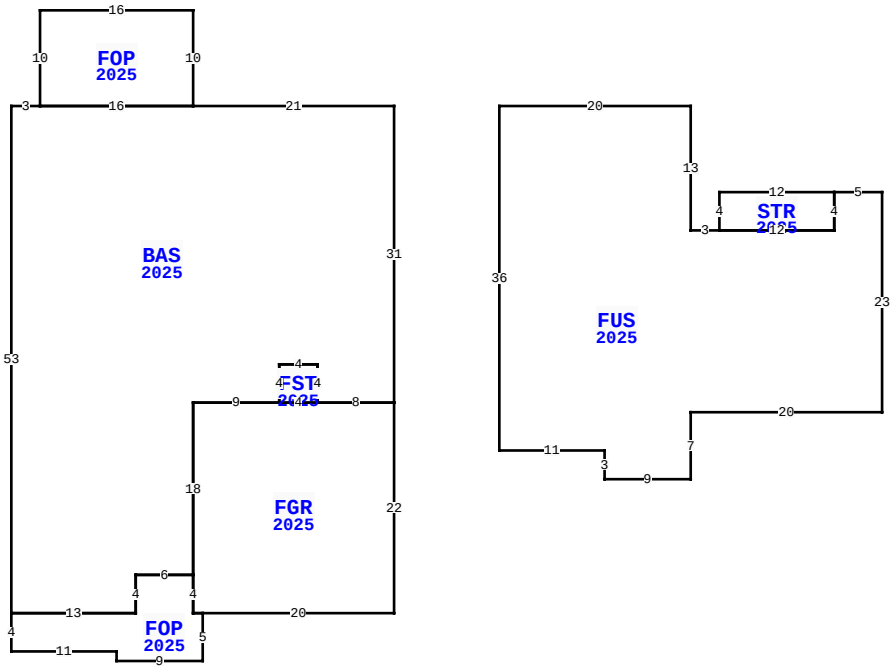

85334 SANDY RIDGE LOOP, YULEE

BLD DATE		LGL DATE	
XF DATE		LAND DATE	04/14/2026 MLU
INC DATE		AG DATE	

NASSAU COUNTY PROPERTY

PAGE 1 of 1 4

VALUATION SUMMARY

VALUATION BY		STANDARD
Tax Group: 4	Tax Dist:	
BUILDING MARKET VALUE		413,018
TOTAL MARKET OB/XF VALUE		0
TOTAL LAND VALUE - MARKET		60,000
TOTAL MARKET VALUE		473,018
SOH/AGL Deduction		0
ASSESSED VALUE		473,018
TOTAL EXEMPTION VALUE	HX HB	51,411
BASE TAXABLE VALUE		421,607
TOTAL JUST VALUE		473,018
NCON VALUE		0
INCOME VALUE		
PREVIOUS YEAR MKT VALUE		520,142

PERMIT NUM	DESCRIPTION	AMT	ISSUED
CO240010920	CO		09/24/2024
B240004377	NEW SFR T-3501, H	496,425	04/17/2024

SALES DATA

OFF RECORD Number	DATE	TYPE INST	Q / U	V / I	RSN CD	SALE PRICE
2812/761	8/28/2025	WD	Q	I	02	533,900
GRANTOR: SEDA CONSTRUCTION COM						
GRANTEE: ANDERSON ROSS & JEN						
2713/1835	5/23/2024	WD	U	V	30	120,000
GRANTOR: SANDY RIDGE DEVELOPME						
GRANTEE: SEDA CONSTRUCTION C						

BUILDING NOTES

BUILDING DIMENSIONS

BAS=[YR=2025;ORIG=10,0] E3 E16 E21 S31 W8 N4 W4 S4 W9 S18 W6 S4 W13 N53 $
FST=[YR=2025;ORIG=38,27] E4 S4 W4 N4 $
FOP=[YR=2025;ORIG=13,0] E16 N10 W16 S10 $
FOP=[YR=2025;ORIG=10,57] N4 E13 N4 E6 S4 E1 S5 W9 N1 W11 $
FGR=[YR=2025;ORIG=29,31] E9 E4 E8 S22 W20 W1 N4 N18 $
FUS=[YR=2025;ORIG=61,0] S36 E11 S3 E9 N7 E20 N23 W5 S4 W12 W3 N13 W20 $
STR=[YR=2025;ORIG=96,13] W12 N4 E12 S4 $
.

EXTRA FEATURES

L N	OB/XF CODE	DESCRIPTION	BLD	CAP	L	W	UNITS	UT	Adj R	ADJ UNIT PRICE	ORIG COND	YEAR ON	YEAR ACTUAL	Q	% COND	OB/XF MKT VALUE	NOTES

LAND DESCRIPTION

TOTAL OB/XF 0

L N	USE CODE	CLS	LAND USE DESCRIPTION	CAP	R D	LOC ZONE	FRONT	DEPTH	TOT LND UTS	UNIT TYPE	D T	DPTH FACT	% COND	TOT ADJ	UNIT PRICE	ADJ UNIT PRICE	LAND VALUE	OTHER ADJUSTMENTS AND NOTES	YEAR	DENSITY	DECL	FRZ	YR	CONSRV
1	000100	C	RES	100		RSF-2	0.00	0.00	1.00	LT		1.00	1.00	1.00	60,000.00	60,000.00	60,000							

REVIEW DATE 12/26/2024 BY KW Total Acres: 0.00 Total Land Value: 60,000 Market: 0 Agricultural: 0 Common: 60,000 PRINTED 07/09/2026 BY SYS