LOT 14H
NASSAU CROSSING TOWNHOMES PH 2
OR 2486/1754

ORTIZ MARVIN GARCIA
86660 SHORTLINE CIR
YULEE, FL 32097

2026

42-2N-27-1091-014H-0000

NASSAU COUNTY PROPERTY

BUILDING CHARACTERISTICS

ELEMENT	CD	CONSTRUCTION
Exterior Wall	31	HARDIE BRD 100
Roof Structur	03	GABLE/HIP 100
Roof Cover	03	COMP SHNGL 100
Interior Wall	05	DRYWALL 100
Interior Floo	14	CARPET 60
Interior Floo	11	CLAY TILE 40
Air Condition	03	CENTRAL 100
Heating Type	04	AIR DUCTED 100
Bedrooms		3 100
Bathrooms		2.5 100
Frame	02	WOOD FRAME 100
Stories	2.	2. 100
Units		1 100
Quality	01	Quality Level 01

DOR CODE 0100 SINGLE FAMILY
MAP NUM | MKT AREA 04
NEIGHBORHOOD/LOC 4092.00

AREA TYPE	TOTAL GROSS AREA	PCT OF BASE	YEAR	TOT ADJ AREA	SUBAREA MARKET VALUE
BAS	532	100	2023	532	60,308
FGR	280	55	2023	154	17,457
FOP	36	30	2023	11	1,247
FOP	72	30	2023	22	2,493
FUS	800	100	2023	800	90,688
STR	48	10	2023	5	567
TOTALS	1,768			1,524	172,761

MARKET ADJUSTMENTS

TYPE	MDL	EFF. AREA	TOT ADJ PTS	EFF. BASE RATE	REPL. COST NEW	AYB	EYB	ECON	FNCT		NORM	% COND
0320	01	1,524	108.5076	113.93	173,629	2023	2023	0	0	0	0.50	99.50

1 TOWNHOUSE 0% - 2025 Heated Area: 1332 HX Base Yr

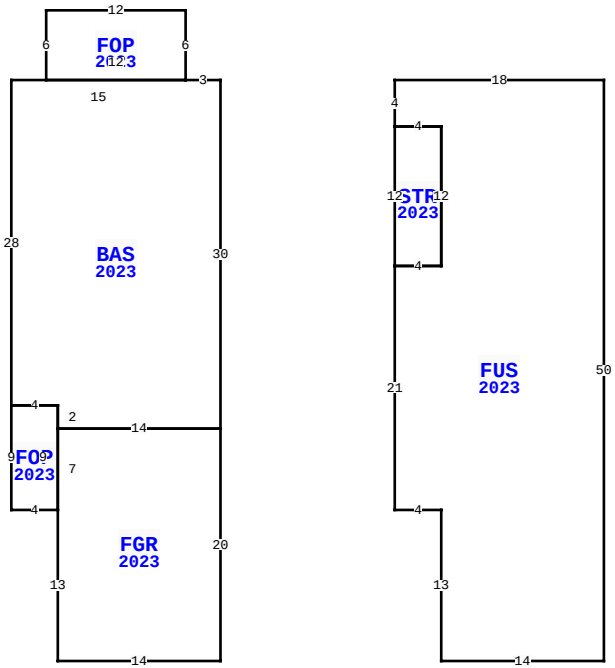

86660 SHORTLINE CIR, YULEE

BLD DATE		LGL DATE	
XF DATE		LAND DATE	04/08/2026 MLU
INC DATE		AG DATE	

VALUATION SUMMARY

VALUATION BY	STANDARD
Tax Group: 4	Tax Dist:
BUILDING MARKET VALUE	172,761
TOTAL MARKET OB/XF VALUE	0
TOTAL LAND VALUE - MARKET	40,000
TOTAL MARKET VALUE	212,761
SOH/AGL Deduction	0
ASSESSED VALUE	212,761
TOTAL EXEMPTION VALUE	0
BASE TAXABLE VALUE	212,761
TOTAL JUST VALUE	212,761
NCON VALUE	0
INCOME VALUE	
PREVIOUS YEAR MKT VALUE	239,718

PERMIT NUM	DESCRIPTION	AMT	ISSUED
230003343	CO	342,996	03/14/2023
21015636	NEW CONSTR	218,551	11/10/2021

SALES DATA

OFF RECORD Number	DATE	TYPE INST	Q / U	V / I	RSN CD	SALE PRICE
2816/142	9/05/2025	QC	U	I	11	100
GRANTOR: SANTIAGO MARIA ELENA						
GRANTEE: ORTIZ MARVIN GARCIA						
2627/0433	3/22/2023	SW	Q	I	01	267,000
GRANTOR: D R HORTON INC-JACKSO						
GRANTEE: ORTIZ MARVIN GARCIA						

BUILDING NOTES

BUILDING DIMENSIONS

BAS2023=W3 FOP2023=N6 W12 S6
E12$ W15 S28 FOP2023=S9 E4
FGR2023= S13 E14 N20 W14 S7$
N9 W4$ E4 S2 E14 N30$ PTR=E15
FUS2023=E18 S50 W14 N13 W4 N21
STR2023=N12 E4 S12 W4$ E4 N12
W4 N4$ W15$.

EXTRA FEATURES

LN	OB/XF CODE	DESCRIPTION	BLD	CAP	L	W	UNITS	UT	Adj R	ADJ UNIT PRICE	ORIG COND	YEAR ON	YEAR ACTUAL	Q	% COND	OB/XF MKT VALUE	NOTES

LAND DESCRIPTION

TOTAL OB/XF 0

LN	USE CODE	CLS	LAND USE DESCRIPTION	CAP	RD	LOC ZONE	FRONT	DEPTH	TOT LND UTS	UNIT TYPE	DT	DPTH FACT	% COND	TOT ADJ	UNIT PRICE	ADJ UNIT PRICE	LAND VALUE	OTHER ADJUSTMENTS AND NOTES	YEAR	DENSITY	DECL	FRZ	YR	CONSRV
1	000100	C	RES	0	0003	PUD	0.00	0.00	1.00	LT		1.00	1.00	1.00	40,000.00	40,000.00	40,000							

REVIEW DATE 04/30/2024 BY KBA Total Acres: 0.00 Total Land Value: 40,000 Market: 0 Agricultural: 0 Common: 40,000 PRINTED 07/09/2026 BY SYS