LOT 12H
NASSAU CROSSING TOWNHOMES PH 2
OR 2486/1754

NORTON KELLEN B
86592 SHORTLINE CIR
YULEE, FL 32097

2026

42-2N-27-1091-012H-0000

NASSAU COUNTY PROPERTY

BUILDING CHARACTERISTICS

ELEMENT	CD	CONSTRUCTION
Exterior Wall	31	HARDIE BRD 100
Roof Structur	03	GABLE/HIP 100
Roof Cover	03	COMP SHNGL 100
Interior Wall	05	DRYWALL 100
Interior Floo	14	CARPET 60
Interior Floo	11	CLAY TILE 40
Air Condition	03	CENTRAL 100
Heating Type	04	AIR DUCTED 100
Bedrooms		3 100
Bathrooms		2.5 100
Frame	02	WOOD FRAME 100
Stories	2.	2. 100
Units		0 100
Occupancy	00	NONE 100
Quality	01	Quality Level 01

DOR CODE 0100 SINGLE FAMILY
MAP NUM | MKT AREA 04
NEIGHBORHOOD/LOC 4092.00

AREA TYPE	TOTAL GROSS AREA	PCT OF BASE	YEAR	TOT ADJ AREA	SUBAREA MARKET VALUE
BAS	532	100	2022	532	60,005
FGR	280	55	2022	154	17,370
FOP	36	30	2022	11	1,240
FOP	72	30	2022	22	2,481
FUS	800	100	2022	800	90,233
STR	48	10	2022	5	564
TOTALS	1,768			1,524	171,893

MARKET ADJUSTMENTS

TYPE	MDL	EFF. AREA	TOT ADJ PTS	EFF. BASE RATE	REPL. COST NEW	AYB	EYB	ECON	FNCT		NORM	% COND
0320	01	1,524	108.5076	113.93	173,629	2022	2022	0	0	0	1.00	99.00

1 TOWNHOUSE 100% - 2023 Heated Area: 1332 HX Base Yr 2023

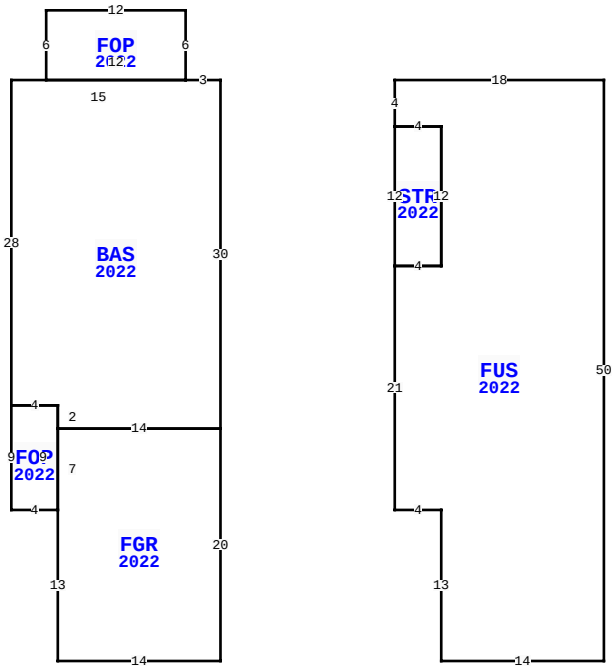

86592 SHORTLINE CIR, YULEE

BLD DATE	04/17/2023 NW	LGL DATE	
XF DATE		LAND DATE	04/08/2026 MLU
INC DATE		AG DATE	

NASSAU COUNTY PROPERTY — VALUATION SUMMARY

VALUATION BY		STANDARD
Tax Group: 4	Tax Dist:	
BUILDING MARKET VALUE		171,893
TOTAL MARKET OB/XF VALUE		0
TOTAL LAND VALUE - MARKET		40,000
TOTAL MARKET VALUE		211,893
SOH/AGL Deduction		0
ASSESSED VALUE		211,893
TOTAL EXEMPTION VALUE	HX HB	51,411
BASE TAXABLE VALUE		160,482
TOTAL JUST VALUE		211,893
NCON VALUE		0
INCOME VALUE		
PREVIOUS YEAR MKT VALUE		238,907

PERMIT NUM	DESCRIPTION	AMT	ISSUED
22016884	CO ISSUED	0	11/14/2022
21010308	NEW CONSTR	218,551	11/01/2021

SALES DATA

OFF RECORD Number	DATE	TYPE INST	Q U	V I	RSN CD	SALE PRICE
2604/0064	11/17/2022	SW	Q	I	01	253,600
GRANTOR: D R HORTON INC-JACKSO						
GRANTEE: NORTH KELLEN B						
2507/0758	10/21/2021	WD	Q	V	05	512,000
GRANTOR: PATRIOT RIDGE LLP						
GRANTEE: D R HORTON INC-JACK						

BUILDING NOTES

BUILDING DIMENSIONS

BAS=[YR=2022] W3 FOP=[YR=2022] N6 W12 S6 E12$ W15 S28
FOP=[YR=2022] S9 E4 FGR=[YR=2022] S13 E14 N20 W14 S7$ N9 W4$
E4 S2 E14 N30$ PTR=E15 FUS=[YR=2022] E18 S50 W14 N13 W4 N21
STR=[YR=2022] N12 E4 S12 W4$ E4 N12 W4 N4$ W15$.

EXTRA FEATURES

LN	OB/XF CODE	DESCRIPTION	BLD	CAP	L	W	UNITS	UT	Adj R	ADJ UNIT PRICE	ORIG COND	YEAR ON	YEAR ACTUAL	Q	% COND	OB/XF MKT VALUE	NOTES

LAND DESCRIPTION

TOTAL OB/XF 0

LN	USE CODE	CLS	LAND USE DESCRIPTION	CAP	RD	LOC ZONE	FRONT	DEPTH	TOT LND UTS	UNIT TYPE	DT	DPTH FACT	% COND	TOT ADJ	UNIT PRICE	ADJ UNIT PRICE	LAND VALUE	OTHER ADJUSTMENTS AND NOTES	YEAR	DENSITY	DECL	FRZ	YR	CONSRV
1	000100	C	RES	100	0003	PUD	0.00	0.00	1.00	LT		1.00	1.00	1.00	40,000.00	40,000.00	40,000							

REVIEW DATE 01/31/2024 BY KBA Total Acres: 0.00 Total Land Value: 40,000 Market: 0 Agricultural: 0 Common: 40,000 PRINTED 07/09/2026 BY SYS