LOT 39
VILLAGES OF WOODBRIDGE #1
PB 7/229

GANT JEFFREY M & SALLY
95516 SONOMA DR
FERNANDINA BEACH, FL 32034

2026

40-2N-28-225V-0001-0390

NASSAU COUNTY PROPERTY

PAGE 1 of 1 4

BUILDING CHARACTERISTICS

ELEMENT	CD	CONSTRUCTION
Exterior Wall	16	WD FR STUC 100
Roof Structur	08	IRREGULAR 100
Roof Cover	03	COMP SHNGL 100
Interior Wall	05	DRYWALL 100
Interior Floo	11	CLAY TILE 50
Interior Floo	14	CARPET 50
Air Condition	03	CENTRAL 100
Heating Type	04	AIR DUCTED 100
Bedrooms		3 100
Bathrooms		2.5 100
Frame	02	WOOD FRAME 100
Stories	2.	2. 100
Units		0 100
Occupancy	00	NONE 100
Quality	03	Quality Level 03

DOR CODE	0100	SINGLE FAMILY	
MAP NUM		MKT AREA	04
NEIGHBORHOOD/LOC	4068.00		

AREA TYPE	TOTAL GROSS AREA	PCT OF BASE	YEAR	TOT ADJ AREA	SUBAREA MARKET VALUE
BAL	117	15	2008	18	1,837
BAS	1,816	100	2008	1,816	185,389
FGR	506	55	2008	278	28,380
FOP	40	30	2008	12	1,225
FOP	149	30	2008	45	4,594
FUS	912	100	2008	912	93,103
TOTALS	3,540			3,081	314,529

MARKET ADJUSTMENTS

TYPE	MDL	EFF. AREA	TOT ADJ PTS	EFF. BASE RATE	REPL. COST NEW	AYB	EYB	ECON	FNCT		NORM	% COND
0100	01	3,081	106.2600	111.57	343,747	2008	2008	0	0	0	8.50	91.50

1 SINGLE FAM 100% - 2024 Heated Area: 2728 HX Base Yr 2024

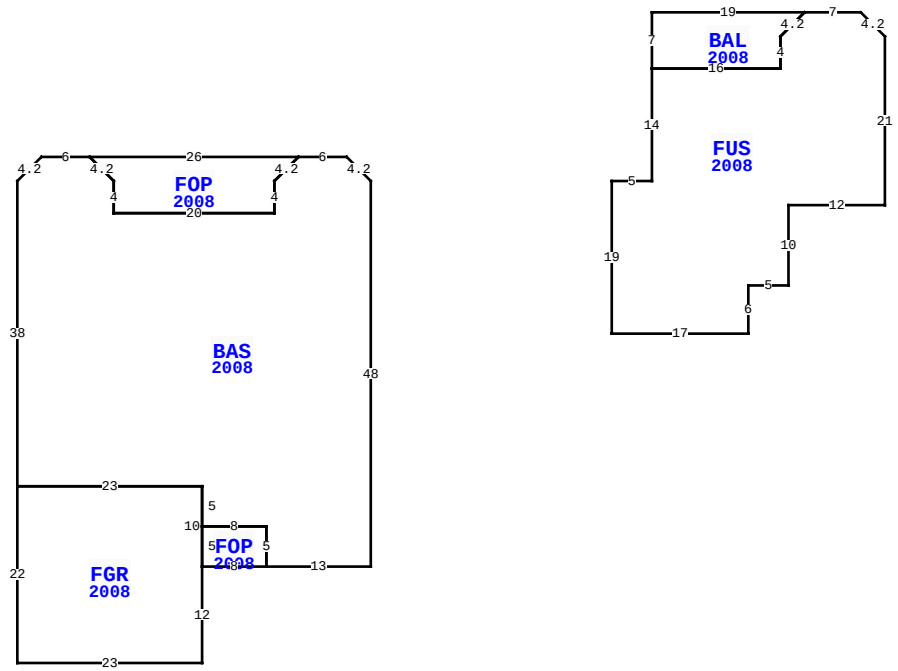

BLD DATE	01/14/2009	RK	LGL DATE
XF DATE			LAND DATE 04/25/2025 MLU
INC DATE			AG DATE

95516 SONOMA DR, FERNANDINA BEACH

VALUATION SUMMARY

VALUATION BY		STANDARD
Tax Group: 4	Tax Dist:	
BUILDING MARKET VALUE		314,529
TOTAL MARKET OB/XF VALUE		0
TOTAL LAND VALUE - MARKET		85,000
TOTAL MARKET VALUE		399,529
SOH/AGL Deduction		0
ASSESSED VALUE		399,529
TOTAL EXEMPTION VALUE	HX HB SX	101,411
BASE TAXABLE VALUE		298,118
TOTAL JUST VALUE		399,529
NCON VALUE		0
INCOME VALUE		
PREVIOUS YEAR MKT VALUE		419,379

PERMIT NUM	DESCRIPTION	AMT	ISSUED
C21629	CO ISSUED	0	01/16/2009
M14092	MECH OTHER	0	08/01/2008
B21629	NEW CONSTR	277,315	07/01/2008
R11383	REPAIR/RRF	1,500	07/01/2008
P13369	OTHER	0	07/01/2008

SALES DATA

OFF RECORD Number	DATE	TYPE INST	Q U	V I	RSN CD	SALE PRICE
2676/374	10/26/2023	WD	Q	I	01	410,000
GRANTOR: O'BRIEN TRACY & THOMA						
GRANTEE: GANT JEFFREY M & SA						
2654/61	6/23/2023	WD	Q	I	01	425,000
GRANTOR: JENKINS AARON R						
GRANTEE: O'BRIEN TRACY & THO						

BUILDING NOTES

BUILDING DIMENSIONS

BAS=[YR=2008] U3 L3 W6 FOP=[YR=2008] W26 D3 R3 S4 E20 N4 U3 R3 $ L3 D3 S4 W20 N4 U3 L3 W6 D3 L3 S38 FGR=[YR=2008] S22 E23 N12 FOP=[YR=2008] E8 N5 W8 S5 $ N10 W23 $ E23 S5 E8 S5 E13 N48 $ PTR= E30 FUS=[YR=2008] E5 N14 BAL=[YR=2008] N7 E19 D3 L3 S4 W16 $ E16 N4 U3 R3 E7 D3 R3 S21 W12 S10 W5 S6 W17 N19 $ W30 $.

EXTRA FEATURES

L N	OB/XF CODE	DESCRIPTION	BLD	CAP	L	W	UNITS	UT	Adj R	ADJ UNIT PRICE	ORIG COND	YEAR ON	YEAR ACTUAL	Q	% COND	OB/XF MKT VALUE	NOTES

LAND DESCRIPTION

TOTAL OB/XF 0

L N	USE CODE	CLS	LAND USE DESCRIPTION	CAP	R D	LOC ZONE	FRONT	DEPTH	TOT LND UTS	UNIT TYPE	D T	DPTH FACT	% COND	TOT ADJ	UNIT PRICE	ADJ UNIT PRICE	LAND VALUE	OTHER ADJUSTMENTS AND NOTES	YEAR	DENSITY	DECL	FRZ	YR	CONSRV
1	000134	C	RES POND	100		PUD	0.00	0.00	1.00	LT		1.00	1.00	1.00	85,000.00	85,000.00	85,000							

REVIEW DATE 01/01/2023 BY CD Total Acres: 0.00 Total Land Value: 85,000 Market: 0 Agricultural: 0 Common: 85,000 PRINTED 07/09/2026 BY SYS