LOT 97
OTTER RUN PB 5/156

TERANDO JEFFREY M & ELLEN A JOINT REVOCABLE TRUST/
96011 OVERLOOK CIRCLE
FERNANDINA BEACH, FL 32034

2026

40-2N-28-1590-0097-0000

BUILDING CHARACTERISTICS

ELEMENT	CD	CONSTRUCTION
Exterior Wall	30	VINYL 80
Exterior Wall	31	HARDIE BRD 20
Roof Structur	03	GABLE/HIP 100
Roof Cover	03	COMP SHNGL 100
Interior Wall	05	DRYWALL 100
Interior Floo	14	CARPET 80
Interior Floo	13	LVT/LAMNT 20
Air Condition	03	CENTRAL 100
Heating Type	04	AIR DUCTED 100
Bedrooms		3 100
Bathrooms		2 100
Frame	02	WOOD FRAME 100
Stories	1.	1. 100
Units		0 100
Occupancy	00	NONE 100
Quality	02	Quality Level 02
DOR CODE	0100	SINGLE FAMILY
MAP NUM		MKT AREA 04
NEIGHBORHOOD/LOC	4013.00	

AREA TYPE	TOTAL GROSS AREA	PCT OF BASE	YEAR	TOT ADJ AREA	SUBAREA MARKET VALUE
BAS	1,686	100	1994	1,686	198,441
FGR	400	55	1994	220	25,894
FOP	50	30	1994	15	1,765
USP	480	30	2026	144	16,949
TOTALS	2,616			2,065	243,050

MARKET ADJUSTMENTS

TYPE	MDL	EFF. AREA	TOT ADJ PTS	EFF. BASE RATE	REPL. COST NEW	AYB	EYB	ECON	FNCT		NORM	% COND
0900	01	2,065	99.6170	138.47	285,941	1994	1994	0	0	0	15.00	85.00

1 SNGL FAM 100% - 2025 Heated Area: 1686 HX Base Yr 2025

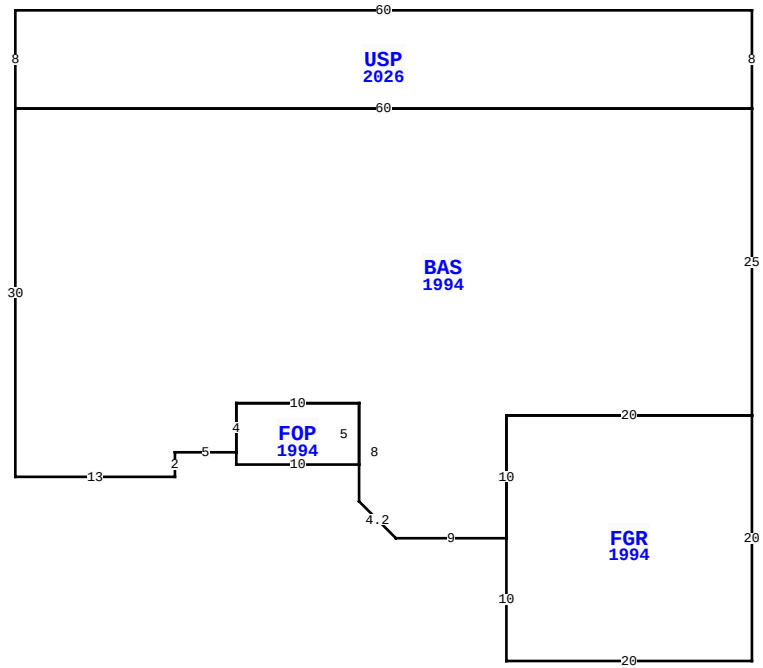

BLD DATE		LGL DATE	
XF DATE		LAND DATE	04/24/2025 MLU
INC DATE		AG DATE	

96011 OVERLOOK CIR, FERNANDINA BEACH

NASSAU COUNTY PROPERTY

PAGE 1 of 1 4

VALUATION SUMMARY

VALUATION BY		STANDARD
Tax Group: 4	Tax Dist:	
BUILDING MARKET VALUE		243,050
TOTAL MARKET OB/XF VALUE		67,640
TOTAL LAND VALUE - MARKET		85,000
TOTAL MARKET VALUE		395,690
SOH/AGL Deduction		0
ASSESSED VALUE		395,690
TOTAL EXEMPTION VALUE	HX HB	51,411
BASE TAXABLE VALUE		344,279
TOTAL JUST VALUE		395,690
NCON VALUE		86,068
INCOME VALUE		
PREVIOUS YEAR MKT VALUE		319,966

PERMIT NUM	DESCRIPTION	AMT	ISSUED
SP240010428	INGROUND SWIMMING	234,000	09/10/2024
94-00812	NEW CONSTR	97,635	02/01/1994

SALES DATA

OFF RECORD Number	DATE	TYPE INST	Q / U	V / I	RSN CD	SALE PRICE
2724/44	6/26/2024	WD	Q	I	01	415,000
GRANTOR: HENNEMANN HARRY E						
GRANTEE: TERANDO JEFFREY M &						
0715/1669	10/11/1994	WD	Q	I		96,900
GRANTOR: TREVETT HOMES INC						
GRANTEE: HENNEMANN HARRY E &						

BUILDING NOTES

BUILDING DIMENSIONS

BAS=[YR=1994;ORIG=0,0] W60 S30 E13 N2 E5 N4 E10 S8 D3R3 E9 N10 E20 N25 $
FGR=[YR=1994;ORIG=-20,35] S10 E20 N20 W20 S10 $
FOP=[YR=1994;ORIG=-42,28] S1 E10 N5 W10 S4 $
USP=[YR=2026;ORIG=-60,0] E60 N8 W60 S8 $
.

EXTRA FEATURES

LN	OB/XF CODE	DESCRIPTION	BLD	CAP	L	W	UNITS	UT	Adj R	ADJ UNIT PRICE	ORIG COND	YEAR ON	YEAR ACTUAL	Q	% COND	OB/XF MKT VALUE	NOTES
1	0500	FP-PRE FAB	0	100	0	0	1.00	UT	3,500.00	3,500.00	100	1994	1994	3	72	2,520	
4	0860	POOL/SPA	0	100	0	0	1.00	UT	50,000.00	50,000.00	100	2026	2025	04	100	50,000	
5	0911	SCRN RM A	0	100	60	14	840.00	SF	18.00	18.00	100	2026	2025		100	15,120	

LAND DESCRIPTION

TOTAL OB/XF 67,640

LN	USE CODE	CLS	LAND USE DESCRIPTION	CAP	RD	LOC ZONE	FRONT	DEPTH	TOT LND UTS	UNIT TYPE	DT	DPTH FACT	% COND	TOT ADJ	UNIT PRICE	ADJ UNIT PRICE	LAND VALUE	OTHER ADJUSTMENTS AND NOTES	YEAR	DENSITY	DECL	FRZ	YR	CONSRV
1	000134	C	RES POND	100	0003	RS-1	0.00	0.00	1.00	LT		1.00	1.00	1.00	85,000.00	85,000.00	85,000							

REVIEW DATE 01/01/2023 BY CD Total Acres: 0.00 Total Land Value: 85,000 Market: 0 Agricultural: 0 Common: 85,000 PRINTED 07/09/2026 BY SYS