LOT 7
SECTION THIRTY-NINE
OR 2249/815

MAYO MATTHEW RYAN & BRITNI MARIE
152655 CR 108
HILLIARD, FL 32046

2026

39-3N-25-1139-0007-0000

BUILDING CHARACTERISTICS

ELEMENT	CD	CONSTRUCTION
Exterior Wall	31	HARDIE BRD 90
Exterior Wall	20	FACE BRICK 10
Roof Structur	08	IRREGULAR 100
Roof Cover	03	COMP SHNGL 80
Roof Cover	13	STAND SEAM 20
Interior Wall	05	DRYWALL 100
Interior Floo	13	LVT/LAMNT 90
Interior Floo	11	CLAY TILE 10
Air Condition	03	CENTRAL 100
Heating Type	04	AIR DUCTED 100
Bedrooms		5 100
Bathrooms		3.5 100
Frame	02	WOOD FRAME 100
Stories	2.	2. 100
Units		0 100
Quality	01	Quality Level 01

DOR CODE 5500 TIMBERLAND 80-89
MAP NUM
MKT AREA 05
NEIGHBORHOOD/LOC 5016.00

AREA TYPE	TOTAL GROSS AREA	PCT OF BASE	YEAR	TOT ADJ AREA	SUBAREA MARKET VALUE
BAS	2,472	100	2024	2,472	359,581
FGR	914	55	2024	503	73,167
FOP	24	30	2024	7	1,018
FOP	362	30	2024	109	15,855
FOP	389	30	2024	117	17,019
FST	558	55	2024	307	44,656
FUS	1,244	100	2024	1,244	180,955
STR	70	10	2024	7	1,018
TOTALS	6,033			4,766	693,271

MARKET ADJUSTMENTS

TYPE	MDL	EFF. AREA	TOT ADJ PTS	EFF. BASE RATE	REPL. COST NEW	AYB	EYB	ECON	FNCT		NORM	% COND
0500	01	4,766	88.1586	146.34	697,456	2023	2023	0	0	0	0.60	99.40

1 SFR CUST 100% - 2024 Heated Area: 3716 HX Base Yr 2024

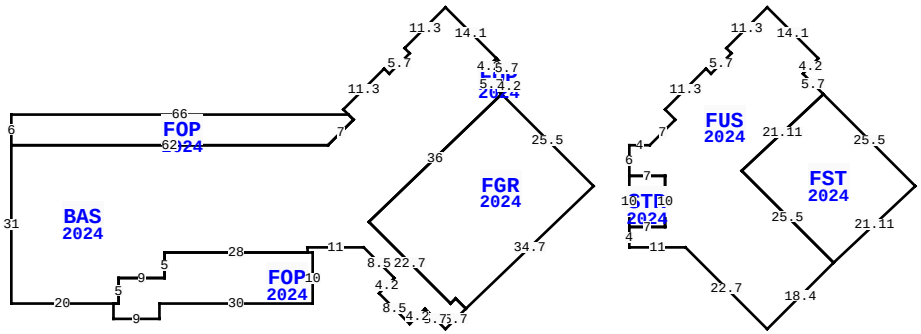

152655 CR 108, HILLIARD

BLD DATE		LGL DATE	
XF DATE		LAND DATE	05/06/2026 MLU
INC DATE		AG DATE	04/24/2026 KB

EXTRA FEATURES

LN	OB/XF CODE	DESCRIPTION	BLD	CAP	L	W	UNITS	UT	Adj R	ADJ UNIT PRICE	ORIG COND	YEAR ON	YEAR ACTUAL	Q	% COND	OB/XF MKT VALUE	NOTES
1	0504	FP-ELECTRI	0	100	0	0	1.00	UT	2,000.00	2,000.00	100	2024	2023	03	99	1,980	
3	0860	POOL/SPA	0	100	28	0	1.00	UT	50,000.00	50,000.00	100	2024	2023	04	100	50,000	
7	0940	SHEDS/PORT	0	100	32	12	384.00	SF	30.00	30.00	100	2024	2023	03	93	10,714	

NASSAU COUNTY PROPERTY

PAGE 1 of 1 4

VALUATION SUMMARY

VALUATION BY		STANDARD
Tax Group: 4	Tax Dist:	
BUILDING MARKET VALUE		693,271
TOTAL MARKET OB/XF VALUE		62,694
TOTAL LAND VALUE - MARKET		170,375
TOTAL MARKET VALUE		792,956
SOH/AGL Deduction		0
ASSESSED VALUE		792,956
TOTAL EXEMPTION VALUE	HX HB	51,411
BASE TAXABLE VALUE		741,545
TOTAL JUST VALUE		926,340
NCON VALUE		0
INCOME VALUE		
PREVIOUS YEAR MKT VALUE		958,165

PERMIT NUM	DESCRIPTION	AMT	ISSUED
21010866	CO ISSUED	0	03/01/2023
22004826	SWIM POOL	71,796	03/29/2022
21014790	NEW CONSTR	661,454	10/26/2021

SALES DATA

OFF RECORD Number	DATE	TYPE INST	Q / U	V / I	RSN CD	SALE PRICE
2437/1412	2/24/2021	SW	Q	V	01	88,700

GRANTOR: RAYDIENT LLC
GRANTEE: MAYO MATTHEW RYAN &

BUILDING NOTES

BUILDING DIMENSIONS

BAS=[YR=2024;ORIG=83,47] S1 W28 S5 W9 S5 W1 W20 N31 E62 U5R5 U2L2 U8R8 D1R1 U4R4 U1L1 U8R8 D10R10 D3L3 D4R4 D25L26 D16R16 U1R1 D2R2 D4L4 U4L4 D3L3 U6L6 U3R3 U6L6 W11 $
FUS=[YR=2024;ORIG=146,43] S4 E11 D16R16 U13R13 U18L18 U15R16 U4L4 U3R3 U10L10 D8L8 D1R1 D4L4 U1L1 D8L8 D2R2 D5L5 W4 S6 E7 S10 W7 $
FGR=[YR=2024;ORIG=121,17] D18R18 D24L25 U2L2 D1L1 U16L16 U25R26 $
FST=[YR=2024;ORIG=184,17] D18R18 D15L16 U18L18 U15R16 $
FOP=[YR=2024;ORIG=25,21] S6 E62 U5R5 U1L1 W66 $
FOP=[YR=2024;ORIG=45,61] N3 E1 N5 E9 N5 E28 E1 S10 W30 S3 W9 $

LAND DESCRIPTION

TOTAL OB/XF 62,694

LN	USE CODE	CLS	LAND USE DESCRIPTION	CAP	RD	LOC ZONE	FRONT	DEPTH	TOT LND UTS	UNIT TYPE	DT	DPTH FACT	% COND	TOT ADJ	UNIT PRICE	ADJ UNIT PRICE	LAND VALUE	OTHER ADJUSTMENTS AND NOTES	YEAR	DENSITY	DECL	FRZ	YR	CONSRV
1	005000	C	AGRICULTURAL	100	0006	OR	0.00	0.00	1.39	AC		1.00	1.00	1.00	25,000.00	25,000.00	34,750							
2	009530	C	POND	100		OR	0.00	0.00	0.25	AC		1.00	1.00	1.00	2,500.00	2,500.00	625							
3	005501	A	TIMBER 2 P S	100		OR	0.00	0.00	2.40	AC		1.00	1.00	1.00	515.00	515.00	1,236							
4	005910	A	HARDWOOD WET	100		OR	0.00	0.00	2.00	AC		1.00	1.00	1.00	90.00	90.00	180							
5	009910	M	MARKET VALUE	100		OR	0.00	0.00	5.40	AC		1.00	1.00	1.00	25,000.00	25,000.00	135,000							
6	005901	A	HARDWOOD SI	100		OR	0.00	0.00	1.00	AC		1.00	1.00	1.00	200.00	200.00	200							

REVIEW DATE 05/30/2023 BY KW Total Acres: 7.04 Total Land Value: 36,991 Market: 135,000 Agricultural: 1,616 Common: 35,375 PRINTED 07/09/2026 BY SYS