LOT 12
BARNWELL MANOR PHASE 3
OR 2445/770

REID ANTHONY R & TAWNYA MICHELLE
92986 CHELTENHAM LANE
FERNANDINA BEACH, FL 32034

2026

39-2N-28-0141-0012-0000

NASSAU COUNTY PROPERTY

BUILDING CHARACTERISTICS

ELEMENT	CD	CONSTRUCTION
Exterior Wall	31	HARDIE BRD 100
Roof Structur	08	IRREGULAR 100
Roof Cover	03	COMP SHNGL 100
Interior Wall	05	DRYWALL 100
Interior Floo	11	CLAY TILE 60
Interior Floo	14	CARPET 40
Air Condition	03	CENTRAL 100
Heating Type	04	AIR DUCTED 100
Bedrooms		4 100
Bathrooms		3.5 100
Frame	02	WOOD FRAME 100
Stories	2.	2. 100
Units		0 100
Occupancy	00	NONE 100
Quality	02	Quality Level 02
DOR CODE	0100	SINGLE FAMILY
MAP NUM		MKT AREA 04
NEIGHBORHOOD/LOC	4088.00	

AREA TYPE	TOTAL GROSS AREA	PCT OF BASE	YEAR	TOT ADJ AREA	SUBAREA MARKET VALUE
BAS	1,858	100	2022	1,858	265,483
FGR	660	55	2022	363	51,868
FOP	76	30	2022	23	3,287
FOP	310	30	2022	93	13,289
FUS	1,079	100	2022	1,079	154,175
PTO	270	5	2024	14	2,001
STR	64	10	2022	6	857
TOTALS	4,317			3,436	490,959

MARKET ADJUSTMENTS

TYPE	MDL	EFF. AREA	TOT ADJ PTS	EFF. BASE RATE	REPL. COST NEW	AYB	EYB	ECON	FNCT		NORM	% COND
0900	01	3,436	103.8312	144.33	495,918	2022	2022	0	0	0	1.00	99.00

1 SNGL FAM 100% - 2024 Heated Area: 2937 HX Base Yr 2024

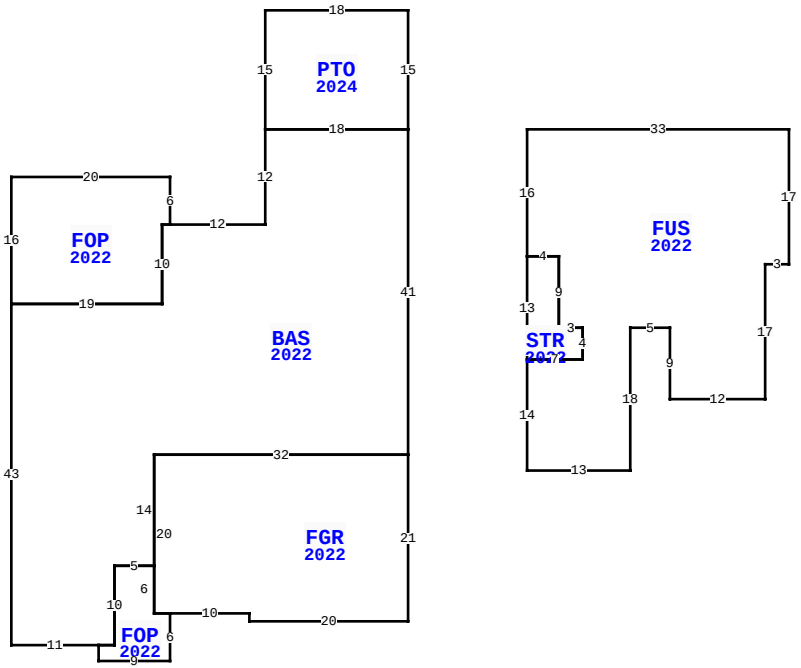

92986 CHELTENHAM LN, FERNANDINA BEACH

BLD DATE		LGL DATE	
XF DATE		LAND DATE	05/06/2025 MLU
INC DATE		AG DATE	

VALUATION SUMMARY

VALUATION BY		STANDARD
Tax Group: 4	Tax Dist:	
BUILDING MARKET VALUE		490,959
TOTAL MARKET OB/XF VALUE		64,003
TOTAL LAND VALUE - MARKET		125,000
TOTAL MARKET VALUE		679,962
SOH/AGL Deduction		154,701
ASSESSED VALUE		525,261
TOTAL EXEMPTION VALUE	HX HB	51,411
BASE TAXABLE VALUE		473,850
TOTAL JUST VALUE		679,962
NCON VALUE		0
INCOME VALUE		
PREVIOUS YEAR MKT VALUE		652,172

PERMIT NUM	DESCRIPTION	AMT	ISSUED
B240001043	POOL ENCLOSURE (T	17,070	01/26/2024
B230007369	POOL		06/08/2023
22018096	CO ISSUED	0	12/09/2022
22000250	NEW CONSTR	485,678	01/05/2022

SALES DATA

OFF RECORD Number	DATE	TYPE INST	Q / U	V / I	RSN CD	SALE PRICE
2607/1736	12/12/2022	SW	Q	I	01	635,800

GRANTOR: AVH NORTH FLORIDA LLC
GRANTEE: REID ANTHONY RICHMO

BUILDING NOTES

EXTRA FEATURES

L N	OB/XF CODE	DESCRIPTION	BLD	CAP	L	W	UNITS	UT	Adj R	ADJ UNIT PRICE	ORIG COND	YEAR ON	YEAR ACTUAL	Q	% COND	OB/XF MKT VALUE	NOTES
3	0912	SCRN RM G	0	100	0	0	717.00	SF	21.00	21.00	100	2024	2023		93	14,003	
4	0860	POOL/SPA	0	100	0	0	1.00	UT	50,000.00	50,000.00	100	2024	2023	04	100	50,000	

BUILDING DIMENSIONS

BAS=[YR=2022;ORIG=0,0] W18 S12 W12 W1 S10 W19 S43 E11 E2 N10 E5 N14 E32 N41 $
FUS=[YR=2022;ORIG=15,0] E33 S17 W3 S17 W12 N9 W5 S18 W13 N14 E7 N4 W3 N9 W4 N16 $
FGR=[YR=2022;ORIG=-30,61] E10 S1 E20 N21 W32 S20 E2 $
FOP=[YR=2022;ORIG=-30,12] N6 W20 S16 E19 N10 E1 $
FOP=[YR=2022;ORIG=-39,65] S2 E9 N6 W2 N6 W5 S10 W2 $
STR=[YR=2022;ORIG=15,29] N13 E4 S9 E3 S4 W7 $
PTR=[ORIG=0,0] E15 W15 $
PTO=[YR=2024;ORIG=-18,-15] E18 S15 W18 N15 $
.

LAND DESCRIPTION

TOTAL OB/XF 64,003

L N	USE CODE	CLS	LAND USE DESCRIPTION	CAP	R D	LOC ZONE	FRONT	DEPTH	TOT LND UTS	UNIT TYPE	D T	DPTH FACT	% COND	TOT ADJ	UNIT PRICE	ADJ UNIT PRICE	LAND VALUE	OTHER ADJUSTMENTS AND NOTES	YEAR	DENSITY	DECL	FRZ	YR	CONSRV
1	000100	C	RES	100		RSF-1	90.00	130.00	1.00	LT		1.00	1.00	1.00	125,000.00	125,000.00	125,000							

REVIEW DATE 07/23/2024 BY NWX Total Acres: 0.00 Total Land Value: 125,000 Market: 0 Agricultural: 0 Common: 125,000 PRINTED 07/09/2026 BY SYS