PT REUBEN LASSETTER GRANT
SEC 38-4N-23E & PT SW1/4 OF
SW1/4 OF SEC 33-4N-23E IN

TOMPKINS LANDING LLC
5161 FIRST COAST HWY
AMELIA ISLAND, FL 32034

2026

38-4N-23-0000-0002-0000

NASSAU COUNTY PROPERTY

BUILDING CHARACTERISTICS

ELEMENT	CD	CONSTRUCTION
Exterior Wall	20	FACE BRICK 100
Roof Structur	08	IRREGULAR 100
Roof Cover	03	COMP SHNGL 100
Interior Wall	05	DRYWALL 100
Interior Floo	11	CLAY TILE 100
Air Condition	03	CENTRAL 100
Heating Type	04	AIR DUCTED 100
Bedrooms		5 100
Bathrooms		4.5 100
Frame	02	WOOD FRAME 100
Stories	0	0 100
Units		0 100
Occupancy	00	NONE 100
Quality	03	Quality Level 03

DOR CODE 5000 IMPROVED AG
MAP NUM | MKT AREA 09
NEIGHBORHOOD/LOC 9001.00

AREA TYPE	TOTAL GROSS AREA	PCT OF BASE	YEAR	TOT ADJ AREA	SUBAREA MARKET VALUE
BAS	3,405	100	2014	3,405	477,673
DCK	564	10	2014	56	7,856
FGR	1,271	55	2014	699	98,060
FOP	80	30	2014	24	3,367
FSP	434	40	2014	174	24,410
UDU	80	55	2014	44	6,173
TOTALS	5,834			4,402	617,538

MARKET ADJUSTMENTS

TYPE	MDL	EFF. AREA	TOT ADJ PTS	EFF. BASE RATE	REPL. COST NEW	AYB	EYB	ECON	FNCT		NORM	% COND
0900	01	4,402	110.0000	152.90	673,066	2014	2014	0	0	0	8.25	91.75

1 SNGL FAM 0% - 0 Heated Area: 3405 HX Base Yr

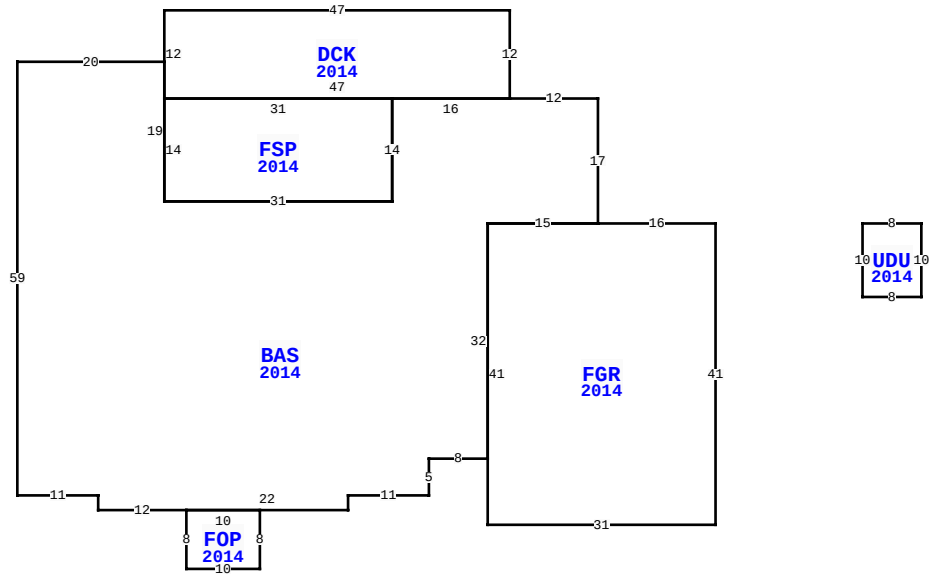

1250 TOMPKINS LANDING RD, HILLIARD

BLD DATE		LGL DATE	
XF DATE		LAND DATE	05/27/2026 MLU
INC DATE		AG DATE	11/05/2024 KBA

VALUATION SUMMARY

VALUATION BY	STANDARD
Tax Group: 4	Tax Dist:
BUILDING MARKET VALUE	639,580
TOTAL MARKET OB/XF VALUE	3,325
TOTAL LAND VALUE - MARKET	1,397,820
TOTAL MARKET VALUE	706,540
SOH/AGL Deduction	0
ASSESSED VALUE	706,540
TOTAL EXEMPTION VALUE	0
BASE TAXABLE VALUE	706,540
TOTAL JUST VALUE	2,040,725
NCON VALUE	0
INCOME VALUE	
PREVIOUS YEAR MKT VALUE	1,264,074

PERMIT NUM	DESCRIPTION	AMT	ISSUED
22001379	GARAGE	53,331	01/24/2022
1326912	CO ISSUED	0	01/06/2014
E25944	TEMP POLE	0	04/08/2013
B1326926	NEW CONSTR	404,711	04/01/2013

SALES DATA

OFF RECORD Number	DATE	TYPE INST	Q U	V I	RSN CD	SALE PRICE
1823/1534	10/22/2012	MS	U	I	18	100
GRANTOR: BOARD OF COUNTY COMMI						
GRANTEE: TOMPKINS LANDING LL						
1770/1099	12/14/2011	WD	U	V	38	350,000
GRANTOR: MBR-FB LLC						
GRANTEE: TOMPKINS LANDING LL						

BUILDING NOTES

BUILDING DIMENSIONS

FGR=[YR=2014] W16 BAS=[YR=2014] N17 W12 DCK=[YR=2014] N12 W47 S12 FSP=[YR=2014] S14 E31 N14 W31$ E47$ W16 S14 W31 N19 W20 S59 E11 S2 E12 FOP=[YR=2014] S8 E10 N8 W10$ E22 N2 E11 N5 E8 N32 E15$ W15 S41 E31 N41$ PTR=E20 UDU=[YR=2014] E8 S10 W8 N10$ W20$.

EXTRA FEATURES

LN	OB/XF CODE	DESCRIPTION	BLD	CAP	L	W	UNITS	UT	Adj R	ADJ UNIT PRICE	ORIG COND	YEAR ON	YEAR ACTUAL	Q	% COND	OB/XF MKT VALUE	NOTES
6	0500	FP-PRE FAB	0	0	0	0	1.00	UT	3,500.00	3,500.00	100	2014	2014	3	95	3,325	

LAND DESCRIPTION

TOTAL OB/XF 3,325

LN	USE CODE	CLS	LAND USE DESCRIPTION	CAP	RD	LOC ZONE	FRONT	DEPTH	TOT LND UTS	UNIT TYPE	DT	DPTH FACT	% COND	TOT ADJ	UNIT PRICE	ADJ UNIT PRICE	LAND VALUE	OTHER ADJUSTMENTS AND NOTES	YEAR	DENSITY	DECL	FRZ	YR	CONSRV
1	005000	C	AGRICULTURAL	0	0005	OR	0.00	0.00	2.00	AC		1.00	1.00	1.00	3,100.00	3,100.00	6,200							
2	005000	C	AGRICULTURAL	0		OR	0.00	0.00	5.25	AC		1.00	1.00	1.00	3,100.00	3,100.00	16,275							
3	009530	C	POND	0		OR	0.00	0.00	2.50	AC		1.00	1.00	1.00	2,500.00	2,500.00	6,250							
4	005900	A	TIMBER WETLA	0		OR	0.00	0.00	57.27	AC		1.00	1.00	1.00	50.00	50.00	2,864							
5	005902	A	HARDWOOD SI	0		OR	0.00	0.00	63.80	AC		1.00	1.00	1.00	170.00	170.00	10,846							
6	005500	A	TIMBER 2 N S	0		OR	0.00	0.00	40.00	AC		1.00	1.00	1.00	530.00	530.00	21,200							

REVIEW DATE 01/01/2023 BY CD Total Acres: 170.82 Total Land Value: 63,635 Market: 1,369,095 Agricultural: 34,910 Common: 28,725 PRINTED 07/09/2026 BY SYS

PT REUBEN LASSETTER GRANT
SEC 38-4N-23E & PT SW1/4 OF
SW1/4 OF SEC 33-4N-23E IN

TOMPKINS LANDING LLC
5161 FIRST COAST HWY
AMELIA ISLAND, FL 32034

2026

38-4N-23-0000-0002-0000

NASSAU COUNTY PROPERTY

BUILDING CHARACTERISTICS

ELEMENT	CD	CONSTRUCTION
Exterior Wall	25	MOD METAL 100
Roof Structur	03	GABLE/HIP 100
Roof Cover	12	MODULAR MT 100
Interior Wall	SELECT NEW	N/A 100
Interior Floo	03	CONC FINSH 70
Interior Cab	SELECT NEW	N/A 30
Air Conditio	SELECT CD	N/A 100
Heating Type	SELECT NEW	N/A 100
Frame	05	STEEL 100
Stories	1.	1. 100
Units		0 100
Quality	06	Quality Level 06
DOR CODE	5000	IMPROVED AG
MAP NUM		MKT AREA 09
NEIGHBORHOOD/LOC	9001.00	

AREA TYPE	TOTAL GROSS AREA	PCT OF BASE	YEAR	TOT ADJ AREA	SUBAREA MARKET VALUE
BAS	1,040	100	2023	1,040	22,042
TOTALS	1,040			1,040	22,042

MARKET ADJUSTMENTS

TYPE	MDL	EFF. AREA	TOT ADJ PTS	EFF. BASE RATE	REPL. COST NEW	AYB	EYB	ECON	FNCT		NORM	% COND
6500	01	1,040	56.0142	21.85	22,724	2022	2022	0	0	0	3.00	97.00

2 GARAGE RES 0% - 2023 Heated Area: 1040 HX Base Yr

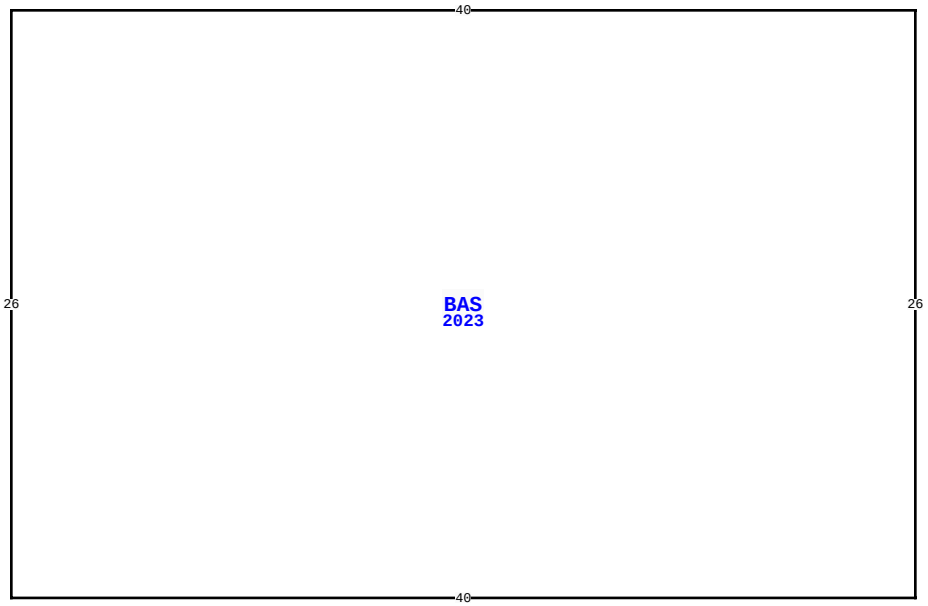

1250 TOMPKINS LANDING RD, HILLIARD

BLD DATE		LGL DATE	
XF DATE		LAND DATE	05/27/2026 MLU
INC DATE		AG DATE	11/05/2024 KBA

VALUATION SUMMARY

VALUATION BY	STANDARD
Tax Group: 4	Tax Dist:
BUILDING MARKET VALUE	639,580
TOTAL MARKET OB/XF VALUE	3,325
TOTAL LAND VALUE - MARKET	1,397,820
TOTAL MARKET VALUE	706,540
SOH/AGL Deduction	0
ASSESSED VALUE	706,540
TOTAL EXEMPTION VALUE	0
BASE TAXABLE VALUE	706,540
TOTAL JUST VALUE	2,040,725
NCON VALUE	0
INCOME VALUE	
PREVIOUS YEAR MKT VALUE	1,264,074

PERMIT NUM	DESCRIPTION	AMT	ISSUED

SALES DATA

OFF RECORD Number	DATE	TYPE INST	Q U	V I	RSN CD	SALE PRICE
1823/1534	10/22/2012	MS	U	I	18	100
GRANTOR: BOARD OF COUNTY COMMI						
GRANTEE: TOMPKINS LANDING LL						
1770/1099	12/14/2011	WD	U	V	38	350,000
GRANTOR: MBR-FB LLC						
GRANTEE: TOMPKINS LANDING LL						

BUILDING NOTES

BUILDING DIMENSIONS

BAS=[YR=2023;ORIG=20,10] E40 S26 W40 N26 $
.

EXTRA FEATURES

LN	OB/XF CODE	DESCRIPTION	BLD	CAP	L	W	UNITS	UT	Adj R	ADJ UNIT PRICE	ORIG COND	YEAR ON	YEAR ACTUAL	Q	% COND	OB/XF MKT VALUE	NOTES

LAND DESCRIPTION

TOTAL OB/XF 0

LN	USE CODE	CLS	LAND USE DESCRIPTION	CAP	RD	LOC ZONE	FRONT	DEPTH	TOT LND UTS	UNIT TYPE	DT	DPTH FACT	% COND	TOT ADJ	UNIT PRICE	ADJ UNIT PRICE	LAND VALUE	OTHER ADJUSTMENTS AND NOTES	YEAR	DENSITY	DECL	FRZ	YR	CONSRV
7	009910	M	MARKET VALUE	0		OR	0.00	0.00	161.07	AC		1.00	1.00	1.00	8,500.00	8,500.00	1,369,095							

REVIEW DATE 01/01/2023 BY CD Total Acres: 170.82 Total Land Value: 63,635 Market: 1,369,095 Agricultural: 34,910 Common: 28,725 PRINTED 07/09/2026 BY SYS