LOT 28
BRADY POINT PRESERVE PB 7/76

LIBERO MARC JOHN &/EAGAN-LIBERO STACY
96044 BRADY POINT RD
FERNANDINA BEACH, FL 32034

**2026**

**38-2N-28-0180-0028-0000**

## BUILDING CHARACTERISTICS

| ELEMENT | CD | CONSTRUCTION |
|---|---|---|
| Exterior Wall | 16 | WD FR STUC 100 |
| Roof Structur | 08 | IRREGULAR 100 |
| Roof Cover | 13 | STAND SEAM 100 |
| Interior Wall | 05 | DRYWALL 100 |
| Interior Floo | 12 | HARDWOOD 50 |
| Interior Floo | 14 | CARPET 50 |
| Air Condition | 03 | CENTRAL 100 |
| Heating Type | 04 | AIR DUCTED 100 |
| Bedrooms | | 3 100 |
| Bathrooms | | 4 100 |
| Frame | 02 | WOOD FRAME 100 |
| Stories | 2. | 2. 100 |
| Units | | 0 100 |
| Quality | 06 | Quality Level 06 |
| DOR CODE | 0100 | SINGLE FAMILY |
| MAP NUM | | MKT AREA 04 |
| NEIGHBORHOOD/LOC | 4014.00 | |

| AREA TYPE | TOTAL GROSS AREA | PCT OF BASE | YEAR | TOT ADJ AREA | SUBAREA MARKET VALUE |
|---|---|---|---|---|---|
| BAS | 2,268 | 100 | 2020 | 2,268 | 804,582 |
| FGR | 522 | 55 | 2020 | 287 | 101,814 |
| FOP | 78 | 30 | 2020 | 23 | 8,160 |
| FOP | 78 | 30 | 2020 | 23 | 8,160 |
| FOP | 90 | 30 | 2020 | 27 | 9,578 |
| FOP | 126 | 30 | 2020 | 38 | 13,480 |
| FOP | 126 | 30 | 2020 | 38 | 13,480 |
| FOP | 350 | 30 | 2020 | 105 | 37,249 |
| FSP | 255 | 40 | 2020 | 102 | 36,185 |
| FUS | 1,445 | 100 | 2020 | 1,445 | 512,619 |
| TOTALS | 5,804 | | | 4,421 | 1,568,366 |

## MARKET ADJUSTMENTS

| TYPE | MDL | EFF. AREA | TOT ADJ PTS | EFF. BASE RATE | REPL. COST NEW | AYB | EYB | ECON | FNCT | | NORM | % COND |
|---|---|---|---|---|---|---|---|---|---|---|---|---|
| 0500 | 12 | 4,421 | 219.1860 | 363.85 | 1,608,581 | 2020 | 2020 | 0 | 0 | 0 | 2.50 | 97.50 |

1 SFR CUST 100% - 2021 Heated Area: 3713 HX Base Yr 2021

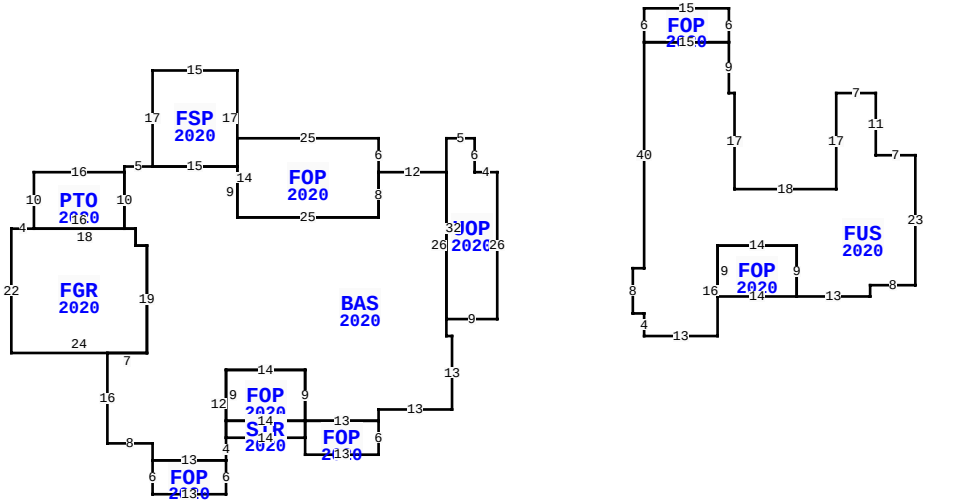


** This building has 13 Sub-Areas

96044 BRADY POINT RD, FERNANDINA BEACH

| | | | |
|---|---|---|---|
| BLD DATE | | LGL DATE | |
| XF DATE | | LAND DATE | 03/25/2026 MLU |
| INC DATE | | AG DATE | |

## NASSAU COUNTY PROPERTY

PAGE 1 of 1 4

### VALUATION SUMMARY

| | | |
|---|---|---|
| VALUATION BY | | STANDARD |
| Tax Group: 4 | Tax Dist: | |
| BUILDING MARKET VALUE | | 1,568,366 |
| TOTAL MARKET OB/XF VALUE | | 80,090 |
| TOTAL LAND VALUE - MARKET | | 450,000 |
| TOTAL MARKET VALUE | | 2,098,456 |
| SOH/AGL Deduction | | 972,606 |
| ASSESSED VALUE | | 1,125,850 |
| TOTAL EXEMPTION VALUE | HX HB | 51,411 |
| BASE TAXABLE VALUE | | 1,074,439 |
| TOTAL JUST VALUE | | 2,098,456 |
| NCON VALUE | | 0 |
| INCOME VALUE | | |
| PREVIOUS YEAR MKT VALUE | | 1,723,923 |

| PERMIT NUM | DESCRIPTION | AMT | ISSUED |
|---|---|---|---|
| C1912308 | CO ISSUED | 0 | 11/25/2020 |
| B2006690 | SCRN ENCLSR | 19,786 | 10/01/2020 |
| B2001187 | SWIM POOL | 60,000 | 02/01/2020 |
| 19012308 | NEW CONSTR | 506,463 | 12/02/2019 |

## SALES DATA

| OFF RECORD Number | DATE | TYPE INST | Q U | V I | RSN CD | SALE PRICE |
|---|---|---|---|---|---|---|
| 2263/0223 | 3/15/2019 | WD | Q | V | 01 | 275,000 |
| GRANTOR: NEDRELOW LAND TRUST | | | | | | |
| GRANTEE: LIBERO MARC JOHN & | | | | | | |
| 1732/1927 | 4/05/2011 | WD | U | V | 30 | 100 |
| GRANTOR: NEDRELOW STEVEN J & K | | | | | | |
| GRANTEE: NEDRELOW STEVEN J & | | | | | | |

## BUILDING NOTES

## EXTRA FEATURES

| LN | OB/XF CODE | DESCRIPTION | BLD | CAP | L | W | UNITS | UT | Adj R | ADJ UNIT PRICE | ORIG COND | YEAR ON | YEAR ACTUAL | Q | % COND | OB/XF MKT VALUE | NOTES |
|---|---|---|---|---|---|---|---|---|---|---|---|---|---|---|---|---|---|
| 5 | 0860 | POOL/SPA | 0 | 100 | 0 | 0 | 1.00 | UT | 70,000.00 | 70,000.00 | 100 | 2020 | 2020 | 06 | 95 | 66,500 | |
| 6 | 0600 | SUMMER KIT | 0 | 100 | 0 | 0 | 1.00 | UT | 10,000.00 | 10,000.00 | 100 | 2020 | 2020 | 3 | 82 | 8,200 | |
| 7 | 0500 | FP-PRE FAB | 0 | 100 | 0 | 0 | 1.00 | UT | 3,500.00 | 3,500.00 | 100 | 2020 | 2020 | 3 | 98 | 3,430 | |
| 8 | 0504 | FP-ELECTRI | 0 | 100 | 0 | 0 | 1.00 | UT | 2,000.00 | 2,000.00 | 100 | 2020 | 2020 | 3 | 98 | 1,960 | |

## BUILDING DIMENSIONS

BAS=[YR=2020;ORIG=-52,28] W5 S1 S10 E2 S3 E2 S19 W7 S16 E8 S3 E13 N4 N12 E14 S9 E13 N2 E13 N13 W1 N3 N26 W12 S8 W25 N9 W15 $
FUS=[YR=2020;ORIG=50,6] S9 E1 S17 E18 N17 E7 S11 E7 S23 W8 S2 W13 N9 W14 S16 W13 N4 W2 N8 E2 N40 E15 $
FGR=[YR=2020;ORIG=-73,39] W4 S22 E24 N19 W2 N3 W18 $
FOP=[YR=2020;ORIG=-12,29] N6 W25 S14 E25 N8 $
UOP=[YR=2020;ORIG=0,55] E9 N26 W4 N6 W5 S32 $
FSP=[YR=2020;ORIG=-37,11] W15 S17 E15 N17 $
PTO=[YR=2020;ORIG=-57,29] W16 S10 E16 N10 $
FOP=[YR=2020;ORIG=-25,73] N9 W14 S9 E14 $
FOP=[YR=2020;ORIG=62,51] W14 N9 E14 S9 $

## LAND DESCRIPTION

TOTAL OB/XF 80,090

| LN | USE CODE | CLS | LAND USE DESCRIPTION | CAP | RD | LOC ZONE | FRONT | DEPTH | TOT LND UTS | UNIT TYPE | DT | DPTH FACT | % COND | TOT ADJ | UNIT PRICE | ADJ UNIT PRICE | LAND VALUE | OTHER ADJUSTMENTS AND NOTES | YEAR | DENSITY | DECL | FRZ | YR | CONSRV |
|---|---|---|---|---|---|---|---|---|---|---|---|---|---|---|---|---|---|---|---|---|---|---|---|---|
| 1 | 000116 | C | RES MARSH | 100 | | RSF-1 | 0.00 | 0.00 | 1.00 | LT | | 1.00 | 1.00 | 1.00 | 450,000.00 | 450,000.00 | 450,000 | | | | | | | |

REVIEW DATE 01/01/2023 BY CD Total Acres: 0.00 Total Land Value: 450,000 Market: 0 Agricultural: 0 Common: 450,000 PRINTED 07/09/2026 BY SYS