LOT 6
BRADY POINT PRESERVE PB 7/76

**OESTMANN ROSS E & JOANNE**
96210 BRADY POINT RD
FERNANDINA BEACH, FL 32034

**2026**

**38-2N-28-0180-0006-0000**

## BUILDING CHARACTERISTICS

| ELEMENT | CD | CONSTRUCTION |
|---|---|---|
| Exterior Wall | 10 | ABOVE AVG 100 |
| Roof Structur | 08 | IRREGULAR 100 |
| Roof Cover | 03 | COMP SHNGL 100 |
| Interior Wall | 05 | DRYWALL 100 |
| Interior Floo | 12 | HARDWOOD 60 |
| Interior Floo | 11 | CLAY TILE 40 |
| Air Condition | 03 | CENTRAL 100 |
| Heating Type | 04 | AIR DUCTED 100 |
| Bedrooms | | 4 100 |
| Bathrooms | | 4.5 100 |
| Frame | 02 | WOOD FRAME 100 |
| Stories | 2. | 2. 100 |
| Units | | 0 100 |
| Quality | 06 | Quality Level 06 |
| DOR CODE | 0100 | SINGLE FAMILY |
| MAP NUM | | MKT AREA 04 |
| NEIGHBORHOOD/LOC | 4014.00 | |

| AREA TYPE | TOTAL GROSS AREA | PCT OF BASE | YEAR | TOT ADJ AREA | SUBAREA MARKET VALUE |
|---|---|---|---|---|---|
| BAS | 2,089 | 100 | 2021 | 2,089 | 717,817 |
| FGR | 969 | 55 | 2021 | 533 | 183,148 |
| FOP | 192 | 30 | 2021 | 58 | 19,930 |
| FOP | 192 | 30 | 2021 | 58 | 19,930 |
| FOP | 216 | 30 | 2021 | 65 | 22,335 |
| FOP | 216 | 30 | 2021 | 65 | 22,335 |
| FOP | 260 | 30 | 2021 | 78 | 26,802 |
| FSP | 216 | 40 | 2021 | 86 | 29,551 |
| FSP | 216 | 40 | 2021 | 86 | 29,551 |
| FUS | 1,641 | 100 | 2021 | 1,641 | 563,876 |
| TOTALS | 6,569 | | | 4,808 | 1,652,112 |

## MARKET ADJUSTMENTS

| TYPE | MDL | EFF. AREA | TOT ADJ PTS | EFF. BASE RATE | REPL. COST NEW | AYB | EYB | ECON | FNCT | | NORM | % COND |
|---|---|---|---|---|---|---|---|---|---|---|---|---|
| 0500 | 12 | 4,808 | 210.1496 | 348.85 | 1,677,271 | 2021 | 2021 | 0 | 0 | 0 | 1.50 | 98.50 |

1 SFR CUST 100% - 2022 Heated Area: 3730 HX Base Yr 2022

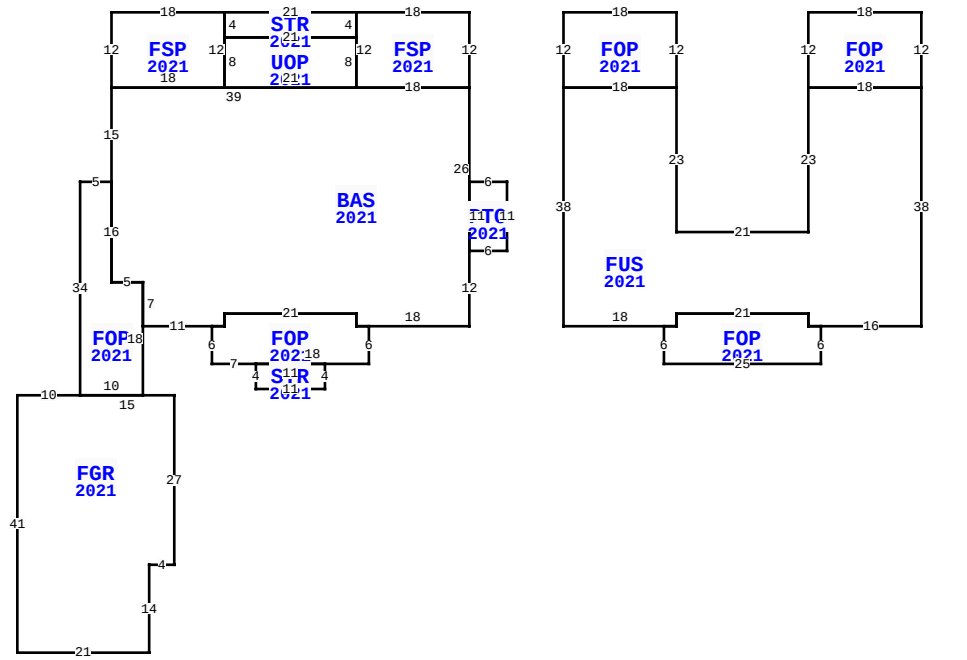


** This building has 14 Sub-Areas

96210 BRADY POINT RD, FERNANDINA BEACH

| | | | |
|---|---|---|---|
| BLD DATE | | LGL DATE | |
| XF DATE | | LAND DATE | 03/25/2026 MLU |
| INC DATE | | AG DATE | |

## NASSAU COUNTY PROPERTY

PAGE 1 of 1 4

### VALUATION SUMMARY

| | | |
|---|---|---|
| VALUATION BY | | STANDARD |
| Tax Group: 4 | Tax Dist: | |
| BUILDING MARKET VALUE | | 1,652,112 |
| TOTAL MARKET OB/XF VALUE | | 44,967 |
| TOTAL LAND VALUE - MARKET | | 400,000 |
| TOTAL MARKET VALUE | | 2,097,079 |
| SOH/AGL Deduction | | 1,074,921 |
| ASSESSED VALUE | | 1,022,158 |
| TOTAL EXEMPTION VALUE | HX HB VX | 56,411 |
| BASE TAXABLE VALUE | | 965,747 |
| TOTAL JUST VALUE | | 2,097,079 |
| NCON VALUE | | 0 |
| INCOME VALUE | | |
| PREVIOUS YEAR MKT VALUE | | 1,797,058 |

| PERMIT NUM | DESCRIPTION | AMT | ISSUED |
|---|---|---|---|
| C2005926 | CO ISSUED | 0 | 06/15/2021 |
| B2005926 | NEW CONSTR | 543,103 | 09/01/2020 |

## SALES DATA

| OFF RECORD Number | DATE | TYPE INST | Q / U | V / I | RSN CD | SALE PRICE |
|---|---|---|---|---|---|---|
| 2352/0721 | 4/03/2020 | WD | Q | V | 01 | 235,000 |
| GRANTOR: THE RANGE AT AMELIA L | | | | | | |
| GRANTEE: OESTMANN ROSS E & J | | | | | | |
| 1751/0002 | 8/08/2011 | WD | U | V | 38 | 800,000 |
| GRANTOR: BRADY POINT PRESERVE | | | | | | |
| GRANTEE: THE RANGE AT AMELIA | | | | | | |

## BUILDING NOTES

## BUILDING DIMENSIONS

FSP=[YR=2021] W18 STR=[YR=2021] W21 FSP=[YR=2021] W18 S12
BAS=[YR=2021] S15 FOP=[YR=2021] W5 S34 FGR=[YR=2021] W10 S41
E21 N14 E4 N27 W15$ E10 N18 W5 N16$ S16 E5 S7 E11
FOP=[YR=2021] S6 E7 STR=[YR=2021] S4 E11 N4 W11$ E18 N6 W2 N2
W21 S2 W2$ E2 N2 E21 S2 E18 N12 PTO=[YR=2021] E6 N11 W6 S11$
N26 W18 UOP=[YR=2021] N8 W21 S8 E21$ W39$ E18 N12$ S4 E21 N4$
S12 E18 N12$ PTR=E15 FOP=[YR=2021] E18 S12 FUS=[YR=2021] S23
E21 N23 FOP=[YR=2021] N12 E18 S12 W18$ E18 S38 W16
FOP=[YR=2021] S6 W25 N6 E2 N2 E21 S2 E2$ W2 N2 W21 S2 W18 N38
E18$ W18 N12$ W15$.

## EXTRA FEATURES

| L N | OB/XF CODE | DESCRIPTION | BLD | CAP | L | W | UNITS | UT | Adj R | ADJ UNIT PRICE | ORIG COND | YEAR ON | YEAR ACTUAL | Q | % COND | OB/XF MKT VALUE | NOTES |
|---|---|---|---|---|---|---|---|---|---|---|---|---|---|---|---|---|---|
| 1 | 0504 | FP-ELECTRI | 0 | 100 | 0 | 0 | 1.00 | UT | 2,000.00 | 2,000.00 | 100 | 2021 | 2021 | 3 | 99 | 1,980 | |
| 4 | 0300 | BOAT DCK W | 0 | 100 | 0 | 0 | 1,098.00 | SF | 40.00 | 40.00 | 100 | 2021 | 2021 | 3 | 90 | 39,528 | |
| 5 | 0311 | WD GANG WY | 0 | 100 | 0 | 0 | 12.00 | SF | 45.00 | 45.00 | 100 | 2021 | 2021 | 3 | 86 | 464 | |
| 6 | 0303 | FLT DOCK W | 0 | 100 | 8 | 16 | 128.00 | SF | 26.00 | 26.00 | 100 | 2021 | 2021 | 3 | 90 | 2,995 | |

## LAND DESCRIPTION

TOTAL OB/XF 44,967

| L N | USE CODE | CLS | LAND USE DESCRIPTION | CAP | R D | LOC ZONE | FRONT | DEPTH | TOT LND UTS | UNIT TYPE | D T | DPTH FACT | % COND | TOT ADJ | UNIT PRICE | ADJ UNIT PRICE | LAND VALUE | OTHER ADJUSTMENTS AND NOTES | YEAR | DENSITY | DECL | FRZ | YR | CONSRV |
|---|---|---|---|---|---|---|---|---|---|---|---|---|---|---|---|---|---|---|---|---|---|---|---|---|
| 1 | 000116 | C | RES MARSH | 100 | | RSF-1 | 0.00 | 0.00 | 1.00 | LT | | 1.00 | 1.00 | 1.00 | 400,000.00 | 400,000.00 | 400,000 | | | | | | | |

REVIEW DATE 01/01/2023 BY CD Total Acres: 0.00 Total Land Value: 400,000 Market: 0 Agricultural: 0 Common: 400,000 PRINTED 07/09/2026 BY SYS