LOT 3
PT OR 1751/2
BRADY POINT PRESERVE PB 7/76

ROBERTS DIANE YARBROUGH & ROBERT GENE
96226 BRADY POINT RD
FERNANDINA BEACH, FL 32034

2026

38-2N-28-0180-0003-0000

NASSAU COUNTY PROPERTY

BUILDING CHARACTERISTICS

ELEMENT	CD	CONSTRUCTION
Exterior Wall	31	HARDIE BRD 100
Roof Structur	08	IRREGULAR 100
Roof Cover	03	COMP SHNGL 100
Interior Wall	05	DRYWALL 100
Interior Floo	13	LVT/LAMNT 70
Interior Floo	12	HARDWOOD 30
Air Condition	03	CENTRAL 100
Heating Type	04	AIR DUCTED 100
Bedrooms		3 100
Bathrooms		3 100
Frame	02	WOOD FRAME 100
Stories	1.	1. 100
Units		0 100
Quality	06	Quality Level 06
DOR CODE	0100	SINGLE FAMILY
MAP NUM		MKT AREA 04
NEIGHBORHOOD/LOC	4014.00	

AREA TYPE	TOTAL GROSS AREA	PCT OF BASE	YEAR	TOT ADJ AREA	SUBAREA MARKET VALUE
BAS	3,681	100	2024	3,681	1,188,731
FDG	322	60	2024	193	62,327
FGR	622	55	2024	342	110,445
FOP	326	30	2024	98	31,648
FSP	858	40	2024	343	110,767
STP	12	10	2024	1	323
STR	33	10	2024	3	969
UOP	160	20	2024	32	10,334
USP	897	30	2024	269	86,870
TOTALS	6,911			4,962	1,602,415

MARKET ADJUSTMENTS

TYPE	MDL	EFF. AREA	TOT ADJ PTS	EFF. BASE RATE	REPL. COST NEW	AYB	EYB	ECON	FNCT		NORM	% COND
0500	12	4,962	195.5167	324.56	1,610,467	2023	2023	0	0	0	0.50	99.50

1 SFR CUST 100% - 2024 Heated Area: 3681 HX Base Yr 2024

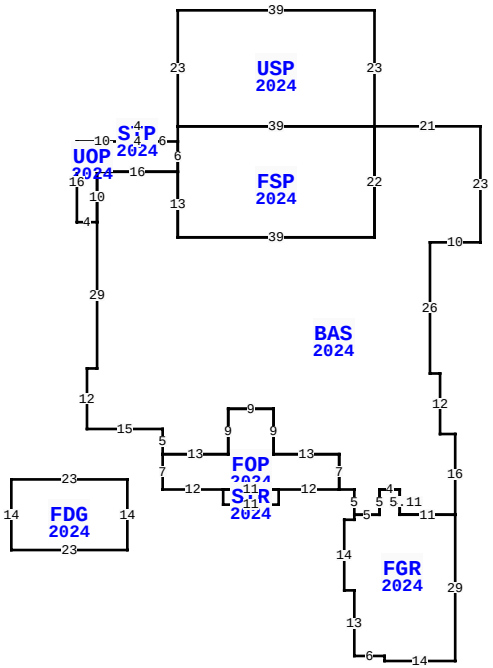

96226 BRADY POINT RD, FERNANDINA BEACH

BLD DATE		LGL DATE	
XF DATE		LAND DATE	03/25/2026 MLU
INC DATE		AG DATE	

VALUATION SUMMARY

VALUATION BY		STANDARD
Tax Group: 4	Tax Dist:	
BUILDING MARKET VALUE		1,602,415
TOTAL MARKET OB/XF VALUE		84,550
TOTAL LAND VALUE - MARKET		400,000
TOTAL MARKET VALUE		2,086,965
SOH/AGL Deduction		826,733
ASSESSED VALUE		1,260,232
TOTAL EXEMPTION VALUE	HX HB	51,411
BASE TAXABLE VALUE		1,208,821
TOTAL JUST VALUE		2,086,965
NCON VALUE		0
INCOME VALUE		
PREVIOUS YEAR MKT VALUE		1,735,932

PERMIT NUM	DESCRIPTION	AMT	ISSUED
B230012225	SCRN ENCL	25,920	09/22/2023
B230010078	POOL	80,000	08/07/2023
22009788	NEW CONSTR	611,047	06/27/2022
22009789	GARAGE	9,579	06/27/2022

SALES DATA

OFF RECORD Number	DATE	TYPE INST	Q / U	V / I	RSN CD	SALE PRICE
2534/0148	1/28/2022	WD	Q	V	02	250,000
GRANTOR: THE RANGE AT AMELIA L						
GRANTEE: ROBERTS DIANE YARBR						
1751/0002	8/08/2011	WD	U	V	38	800,000
GRANTOR: BRADY POINT PRESERVE						
GRANTEE: THE RANGE AT AMELIA						

BUILDING NOTES

EXTRA FEATURES

LN	OB/XF CODE	DESCRIPTION	BLD	CAP	L	W	UNITS	UT	Adj R	ADJ UNIT PRICE	ORIG COND	YEAR ON	YEAR ACTUAL	Q	% COND	OB/XF MKT VALUE	NOTES
3	0502	FP-CUSTOM	0	100	0	0	1.00	UT	10,000.00	10,000.00	100	2024	2023		99	9,900	
4	0600	SUMMER KIT	0	100	0	0	1.00	UT	5,000.00	5,000.00	100	2024	2023		93	4,650	
5	0860	POOL/SPA	0	100	30	0	1.00	UT	70,000.00	70,000.00	100	2024	2023	06	100	70,000	

BUILDING DIMENSIONS

BAS=[YR=2024;ORIG=80,10] W21 S22 W39 N13 W16 S10 S29 W2 S12 E15 S5 E13 N9 E9 S9 E13 S7 E3 S5 E5 N5 E4 D4.11L0 D0.1R11 N16 W3 N12 W2 N26 E10 N23 $
USP=[YR=2024;ORIG=20,-13] E39 S23 W39 N23 $
FSP=[YR=2024;ORIG=59,10] W39 S3 S6 S13 E39 N22 $
FGR=[YR=2024;ORIG=55,88] W2 S14 E2 S13 E6 S1 E14 N29 D0L11 U5R0 W4 S5 W5 S1 $
FOP=[YR=2024;ORIG=17,75] E13 N9 E9 S9 E13 S7 W12 W11 W12 N7 $
FDG=[YR=2024;ORIG=10,80] W23 S14 E23 N14 $
UOP=[YR=2024;ORIG=20,13] W6 W4 W10 S16 E4 N10 E16 N6 $
STR=[YR=2024;ORIG=29,82] E11 S3 W11 N3 $
STP=[YR=2024;ORIG=10,10] E4 S3 W4 N3 $

LAND DESCRIPTION

TOTAL OB/XF 84,550

LN	USE CODE	CLS	LAND USE DESCRIPTION	CAP	RD	LOC ZONE	FRONT	DEPTH	TOT LND UTS	UNIT TYPE	DT	DPTH FACT	% COND	TOT ADJ	UNIT PRICE	ADJ UNIT PRICE	LAND VALUE	OTHER ADJUSTMENTS AND NOTES	YEAR	DENSITY	DECL	FRZ	YR	CONSRV
1	000116	C	RES MARSH	100		RSF-1	0.00	0.00	1.00	LT		1.00	1.00	1.00	400,000.00	400,000.00	400,000							

REVIEW DATE 11/17/2023 BY DJ Total Acres: 0.00 Total Land Value: 400,000 Market: 0 Agricultural: 0 Common: 400,000 PRINTED 07/09/2026 BY SYS