LOT 32
IN OR 1042/788
MEADOWFIELD UNIT 1B PB 6/203

SMILEY FRED JR/SMITH-SMILEY CYMONNE M
86227 FIELDSTONE DRIVE
YULEE, FL 32097

2026

38-2N-27-1331-0032-0000

NASSAU COUNTY PROPERTY

BUILDING CHARACTERISTICS

ELEMENT	CD	CONSTRUCTION
Exterior Wall	31	HARDIE BRD 70
Exterior Wall	16	WD FR STUC 30
Roof Structur	03	GABLE/HIP 100
Roof Cover	03	COMP SHNGL 100
Interior Wall	05	DRYWALL 100
Interior Floo	14	CARPET 80
Interior Floo	11	CLAY TILE 20
Air Condition	03	CENTRAL 100
Heating Type	04	AIR DUCTED 100
Bedrooms		4 100
Bathrooms		3 100
Frame	02	WOOD FRAME 100
Stories	2.	2. 100
Units		0 100
Occupancy	00	NONE 100
Quality	06	Quality Level 06
DOR CODE	0100	SINGLE FAMILY
MAP NUM		MKT AREA 04
NEIGHBORHOOD/LOC	4045.00	

AREA TYPE	TOTAL GROSS AREA	PCT OF BASE	YEAR	TOT ADJ AREA	SUBAREA MARKET VALUE
BAS	1,649	100	2002	1,649	190,857
FGR	502	55	2002	276	31,944
FOP	33	30	2002	10	1,157
FOP	143	30	2002	43	4,977
FUS	693	100	2002	693	80,208
TOTALS	3,020			2,671	309,144

MARKET ADJUSTMENTS

TYPE	MDL	EFF. AREA	TOT ADJ PTS	EFF. BASE RATE	REPL. COST NEW	AYB	EYB	ECON	FNCT		NORM	% COND
0100	01	2,671	124.3104	130.53	348,646	2002	2002	0	0	0	11.33	88.67

1 SINGLE FAM 100% - 2003 Heated Area: 2342 HX Base Yr 2003

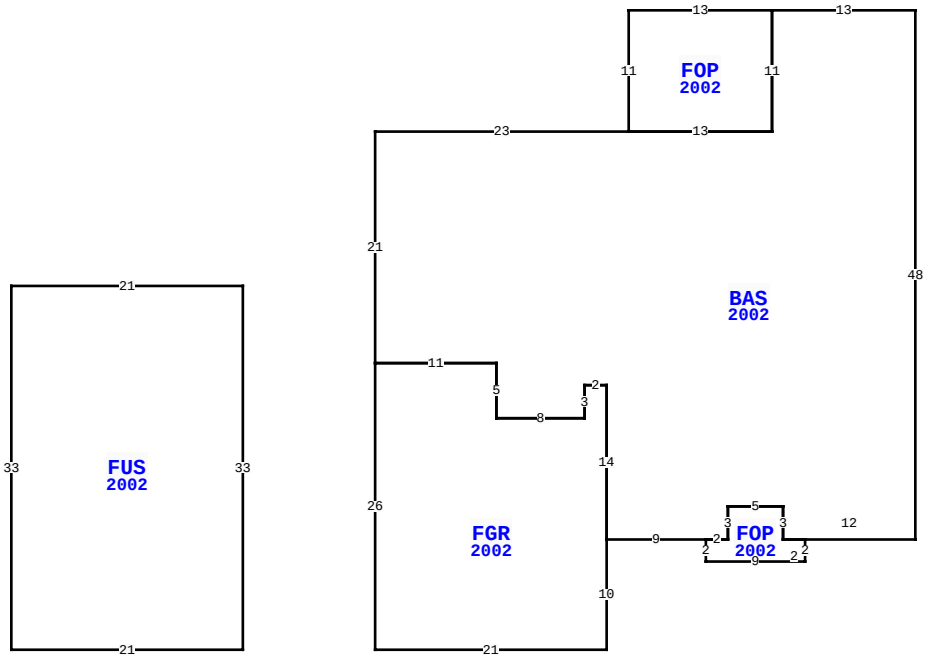

86227 FIELDSTONE DR, YULEE

BLD DATE	03/03/2023 NW	LGL DATE	
XF DATE		LAND DATE	04/14/2026 MLU
INC DATE		AG DATE	

VALUATION SUMMARY

VALUATION BY		STANDARD
Tax Group: 4	Tax Dist:	
BUILDING MARKET VALUE		309,144
TOTAL MARKET OB/XF VALUE		0
TOTAL LAND VALUE - MARKET		65,000
TOTAL MARKET VALUE		374,144
SOH/AGL Deduction		181,966
ASSESSED VALUE		192,178
TOTAL EXEMPTION VALUE	HX HB	51,411
BASE TAXABLE VALUE		140,767
TOTAL JUST VALUE		374,144
NCON VALUE		0
INCOME VALUE		
PREVIOUS YEAR MKT VALUE		376,175

PERMIT NUM	DESCRIPTION	AMT	ISSUED
20009482	REPAIR/RRF	9,250	10/09/2020
R013542	NEW CONSTR	0	09/01/2001

SALES DATA

OFF RECORD Number	DATE	TYPE INST	Q U	V I	RSN CD	SALE PRICE
1042/0788	3/08/2002	WD	Q	I		138,200
GRANTOR: ATLANTIC BUILDERS INC						
GRANTEE: SMILEY FRED JR & CY						
0998/0348	7/17/2001	WD	U	V	19	27,500
GRANTOR: MEADOWFIELD JOINT VEN						
GRANTEE: ATLANTIC BUILDERS						

BUILDING NOTES

BUILDING DIMENSIONS

BAS=[YR=2002;ORIG=0,0] W13 S11 W13 W23 S21 E11 S5 E8 N3 E2 S14 E9 E2 N3 E5 S3 E12 N48 $
FUS=[YR=2002;ORIG=-82,25] E21 S33 W21 N33 $
FGR=[YR=2002;ORIG=-49,32] S26 E21 N10 N14 W2 S3 W8 N5 W11 $
FOP=[YR=2002;ORIG=-13,0] W13 S11 E13 N11 $
FOP=[YR=2002;ORIG=-19,48] S2 E9 N2 W2 N3 W5 S3 W2 $
PTR=[ORIG=0,0] E20 W20 $
.

EXTRA FEATURES

LN	OB/XF CODE	DESCRIPTION	BLD	CAP	L	W	UNITS	UT	Adj R	ADJ UNIT PRICE	ORIG COND	YEAR ON	YEAR ACTUAL	Q	% COND	OB/XF MKT VALUE	NOTES

LAND DESCRIPTION

TOTAL OB/XF 0

LN	USE CODE	CLS	LAND USE DESCRIPTION	CAP	RD	LOC ZONE	FRONT	DEPTH	TOT LND UTS	UNIT TYPE	DT	DPTH FACT	% COND	TOT ADJ	UNIT PRICE	ADJ UNIT PRICE	LAND VALUE	OTHER ADJUSTMENTS AND NOTES	YEAR	DENSITY	DECL	FRZ	YR	CONSRV
1	000100	C	RES	100	0003	RSF-1	0.00	0.00	1.00	LT		1.00	1.00	1.00	65,000.00	65,000.00	65,000							

REVIEW DATE 01/01/2023 BY CD Total Acres: 0.00 Total Land Value: 65,000 Market: 0 Agricultural: 0 Common: 65,000 PRINTED 07/09/2026 BY SYS