LOT 16
BELLS RIVER ESTATES #3
PB 7/116

NAFAN LP
145 POINT DRIVE NW #1004
CALGARY ALBERTA, T3B4W-1

2026

37-3N-27-0136-0016-0000

NASSAU COUNTY PROPERTY

BUILDING CHARACTERISTICS

ELEMENT	CD	CONSTRUCTION
Exterior Wall	16	WD FR STUC 100
Roof Structur	08	IRREGULAR 100
Roof Cover	03	COMP SHNGL 100
Interior Wall	05	DRYWALL 100
Interior Floo	14	CARPET 60
Interior Floo	11	CLAY TILE 40
Air Condition	03	CENTRAL 100
Heating Type	04	AIR DUCTED 100
Bedrooms		5 100
Bathrooms		4 100
Frame	02	WOOD FRAME 100
Stories	1.5	1.5 100
Units		0 100
Occupancy	00	NONE 100
Quality	01	Quality Level 01
DOR CODE	0100	SINGLE FAMILY
MAP NUM		MKT AREA 04
NEIGHBORHOOD/LOC	4062.00	

AREA TYPE	TOTAL GROSS AREA	PCT OF BASE	YEAR	TOT ADJ AREA	SUBAREA MARKET VALUE
BAS	2,426	100	2006	2,426	296,155
DCK	444	10	2006	44	5,371
FGR	654	55	2006	360	43,947
FOP	216	30	2006	65	7,935
FSP	133	40	2006	53	6,470
FUS	381	100	2006	381	46,511
TOTALS	4,254			3,329	406,389

MARKET ADJUSTMENTS

TYPE	MDL	EFF. AREA	TOT ADJ PTS	EFF. BASE RATE	REPL. COST NEW	AYB	EYB	ECON	FNCT		NORM	% COND
0900	01	3,329	97.0416	134.89	449,049	2006	2006	0	0	0	9.50	90.50

1 SNGL FAM 0% - 2026 Heated Area: 2807 HX Base Yr

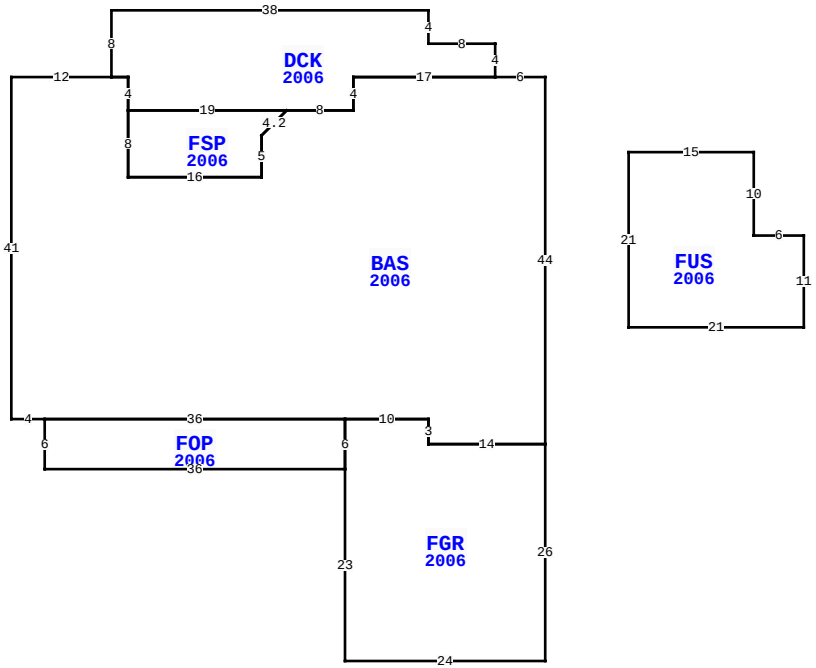

97182 YORKSHIRE DR, YULEE

BLD DATE		LGL DATE	
XF DATE		LAND DATE	04/08/2026 MLU
INC DATE		AG DATE	

VALUATION SUMMARY

VALUATION BY	STANDARD
Tax Group: 4	Tax Dist:
BUILDING MARKET VALUE	406,389
TOTAL MARKET OB/XF VALUE	3,080
TOTAL LAND VALUE - MARKET	75,000
TOTAL MARKET VALUE	484,469
SOH/AGL Deduction	0
ASSESSED VALUE	484,469
TOTAL EXEMPTION VALUE	0
BASE TAXABLE VALUE	484,469
TOTAL JUST VALUE	484,469
NCON VALUE	0
INCOME VALUE	
PREVIOUS YEAR MKT VALUE	473,375

PERMIT NUM	DESCRIPTION	AMT	ISSUED
C0816443	CO ISSUED	0	08/15/2006
B0816443	NEW CONSTR	0	08/15/2006

SALES DATA

OFF RECORD Number	DATE	TYPE INST	Q / U	V / I	RSN CD	SALE PRICE
2830/1712	11/21/2025	WD	U	I	30	240,000
GRANTOR: 78649110 DELAWARE LP						
GRANTEE: NAFAN LP						
1902/0193	1/24/2014	SW	U	I	12	154,900
GRANTOR: DEUTSCHE BANK NATIONA						
GRANTEE: 78649110 DELAWARE L						

BUILDING NOTES

BUILDING DIMENSIONS

BAS=[YR=2006;ORIG=0,0] W6 W17 S4 W8 D3L3 S5 W16 N8 N4 W2 W12 S41 E4 E36 E10 S3 E14 N44 $
FGR=[YR=2006;ORIG=-24,41] S6 S23 E24 N26 W14 N3 W10 $
DCK=[YR=2006;ORIG=-6,0] N4 W8 N4 W38 S8 E2 S4 E19 E8 N4 E17 $
FUS=[YR=2006;ORIG=10,9] E15 S10 E6 S11 W21 N21 $
FOP=[YR=2006;ORIG=-60,41] S6 E36 N6 W36 $
FSP=[YR=2006;ORIG=-50,4] S8 E16 N5 U3R3 W19 $
PTR=[ORIG=0,0] E20 W20 $
.

EXTRA FEATURES

LN	OB/XF CODE	DESCRIPTION	BLD	CAP	L	W	UNITS	UT	Adj R	ADJ UNIT PRICE	ORIG COND	YEAR ON	YEAR ACTUAL	Q	% COND	OB/XF MKT VALUE	NOTES
1	0500	FP-PRE FAB	0	0	0	0	1.00	UT	3,500.00	3,500.00	100	2006	2006	3	88	3,080	

LAND DESCRIPTION

TOTAL OB/XF 3,080

LN	USE CODE	CLS	LAND USE DESCRIPTION	CAP	RD	LOC ZONE	FRONT	DEPTH	TOT LND UTS	UNIT TYPE	DT	DPTH FACT	% COND	TOT ADJ	UNIT PRICE	ADJ UNIT PRICE	LAND VALUE	OTHER ADJUSTMENTS AND NOTES	YEAR	DENSITY	DECL	FRZ	YR	CONSRV
1	000116	C	RES MARSH	0	0003	PUD	0.00	0.00	1.00	LT		1.00	1.00	1.00	75,000.00	75,000.00	75,000							

REVIEW DATE 03/13/2024 BY KWA Total Acres: 0.00 Total Land Value: 75,000 Market: 0 Agricultural: 0 Common: 75,000 PRINTED 07/09/2026 BY SYS