LOT 34
IN OR 1857/1567
BELLS RIVER ESTATE #1 PB 7/90

AMERICAN HOMES 4 RENT PROPERTIES THREE LLC/
ATTN: PROPERTY TAX DEPARTMENT, 23975 PARK SORRENTO, SUITE 3
CALABASAS, CA 91302

2026

37-3N-27-0134-0034-0000

NASSAU COUNTY PROPERTY

BUILDING CHARACTERISTICS

ELEMENT	CD	CONSTRUCTION
Exterior Wall	17	CB STUCCO 60
Exterior Wall	05	AVERAGE 40
Roof Structur	03	GABLE/HIP 100
Roof Cover	03	COMP SHNGL 100
Interior Wall	05	DRYWALL 100
Interior Floo	14	CARPET 70
Interior Floo	08	SHT VINYL 30
Air Condition	03	CENTRAL 100
Heating Type	04	AIR DUCTED 100
Bedrooms		3 100
Bathrooms		2.5 100
Frame	02	WOOD FRAME 100
Stories	2.	2. 100
Units		0 100
Occupancy	00	NONE 100
Quality	03	Quality Level 03
DOR CODE	0100	SINGLE FAMILY
MAP NUM		MKT AREA 04
NEIGHBORHOOD/LOC	4055.00	

AREA TYPE	TOTAL GROSS AREA	PCT OF BASE	YEAR	TOT ADJ AREA	SUBAREA MARKET VALUE
BAS	1,120	100	2006	1,120	108,626
FGR	400	55	2006	220	21,337
FOP	8	30	2006	2	194
FSP	180	40	2006	72	6,983
FUS	1,139	100	2006	1,139	110,469
TOTALS	2,847			2,553	247,609

MARKET ADJUSTMENTS

TYPE	MDL	EFF. AREA	TOT ADJ PTS	EFF. BASE RATE	REPL. COST NEW	AYB	EYB	ECON	FNCT		NORM	% COND
0100	01	2,553	101.9520	107.05	273,299	2006	2006	0	0	0	9.40	90.60

1 SINGLE FAM 0% - 0 Heated Area: 2259 HX Base Yr

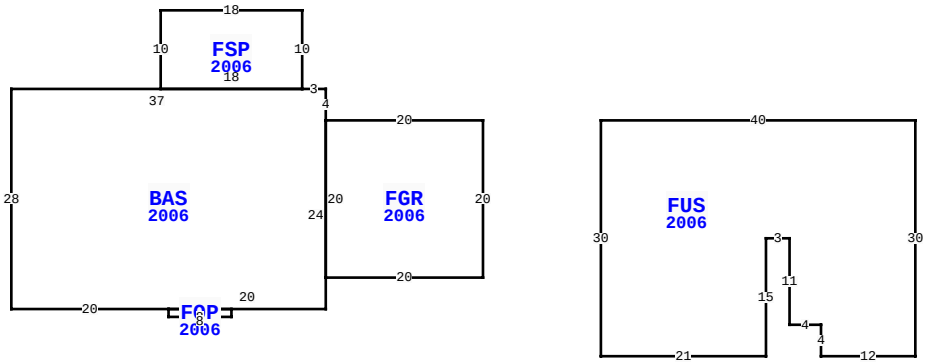

87164 KIPLING DR, YULEE

BLD DATE	04/04/2023 NW	LGL DATE	
XF DATE		LAND DATE	04/08/2026 MLU
INC DATE		AG DATE	

VALUATION SUMMARY

VALUATION BY	STANDARD
Tax Group: 4	Tax Dist:
BUILDING MARKET VALUE	247,609
TOTAL MARKET OB/XF VALUE	0
TOTAL LAND VALUE - MARKET	65,000
TOTAL MARKET VALUE	312,609
SOH/AGL Deduction	27,337
ASSESSED VALUE	285,272
TOTAL EXEMPTION VALUE	0
BASE TAXABLE VALUE	285,272
TOTAL JUST VALUE	312,609
NCON VALUE	0
INCOME VALUE	
PREVIOUS YEAR MKT VALUE	306,090

PERMIT NUM	DESCRIPTION	AMT	ISSUED
B18104	SCRN RM	3,000	10/31/2006
B0617278	PTO	1,800	01/01/2006
C16433	CO ISSUED	0	01/01/2006
B16433	NEW CONSTR	0	01/01/2006

SALES DATA

OFF RECORD Number	DATE	TYPE INST	Q / U	V / I	RSN CD	SALE PRICE
1857/1567	5/14/2013	WD	Q	I	02	130,000
GRANTOR: GUILARTE MAYRA C						
GRANTEE: AMERICAN HOMES 4 RE						
1419/1546	6/13/2006	WD	Q	I		222,200
GRANTOR: MARONDA HOMES INC						
GRANTEE: NARVAEZ MAYRA CARID						

BUILDING NOTES

BUILDING DIMENSIONS

FGR=[YR=2006] W20 BAS=[YR=2006] N4 W3 FSP=[YR=2006] N10 W18 S10 E18$ W37 S28 E20 FOP=[YR=2006] S1 E8 N1 W8$ E20 N24$ S20 E20 N20$ PTR=E15 FUS=[YR=2006] E40 S30 W12 N4 W4 N11 W3 S15 W21 N30$ W15$.

EXTRA FEATURES

LN	OB/XF CODE	DESCRIPTION	BLD	CAP	L	W	UNITS	UT	Adj R	ADJ UNIT PRICE	ORIG COND	YEAR ON	YEAR ACTUAL	Q	% COND	OB/XF MKT VALUE	NOTES

LAND DESCRIPTION

TOTAL OB/XF 0

LN	USE CODE	CLS	LAND USE DESCRIPTION	CAP	RD	LOC ZONE	FRONT	DEPTH	TOT LND UTS	UNIT TYPE	DT	DPTH FACT	% COND	TOT ADJ	UNIT PRICE	ADJ UNIT PRICE	LAND VALUE	OTHER ADJUSTMENTS AND NOTES	YEAR	DENSITY	DECL	FRZ	YR	CONSRV
1	000100	C	RES	0	0003	PUD	0.00	0.00	1.00	LT		1.00	1.00	1.00	65,000.00	65,000.00	65,000							

REVIEW DATE 01/01/2023 BY CD Total Acres: 0.00 Total Land Value: 65,000 Market: 0 Agricultural: 0 Common: 65,000 PRINTED 07/09/2026 BY SYS