LOT 25
IN OR 2051/1014
CONSERV ESMT PT OR 1299/53

PISANI PAUL
87057 KIPLING DRIVE
YULEE, FL 32097

2026

37-3N-27-0134-0025-0000

BUILDING CHARACTERISTICS

ELEMENT	CD	CONSTRUCTION
Exterior Wall	17	CB STUCCO 60
Exterior Wall	16	WD FR STUC 40
Roof Structur	03	GABLE/HIP 100
Roof Cover	03	COMP SHNGL 100
Interior Wall	05	DRYWALL 100
Interior Floo	14	CARPET 70
Interior Floo	08	SHT VINYL 30
Air Condition	03	CENTRAL 100
Heating Type	04	AIR DUCTED 100
Bedrooms		4 100
Bathrooms		2.5 100
Frame	02	WOOD FRAME 100
Stories	2.	2. 100
Units		0 100
Occupancy	00	NONE 100
Quality	03	Quality Level 03
DOR CODE	0100	SINGLE FAMILY
MAP NUM		MKT AREA 04
NEIGHBORHOOD/LOC	4055.00	

AREA TYPE	TOTAL GROSS AREA	PCT OF BASE	YEAR	TOT ADJ AREA	SUBAREA MARKET VALUE
BAS	1,120	100	2006	1,120	110,756
FGR	651	55	2006	358	35,403
FOP	21	30	2006	6	594
FSP	280	40	2006	112	11,075
FUS	1,112	100	2006	1,112	109,965
PTO	28	5	2006	1	99
TOTALS	3,212			2,709	267,891

MARKET ADJUSTMENTS

TYPE	MDL	EFF. AREA	TOT ADJ PTS	EFF. BASE RATE	REPL. COST NEW	AYB	EYB	ECON	FNCT		NORM	% COND
0100	01	2,709	104.0640	109.27	296,012	2006	2006	0	0	0	9.50	90.50

1 SINGLE FAM 100% - 2007 Heated Area: 2232 HX Base Yr 2007

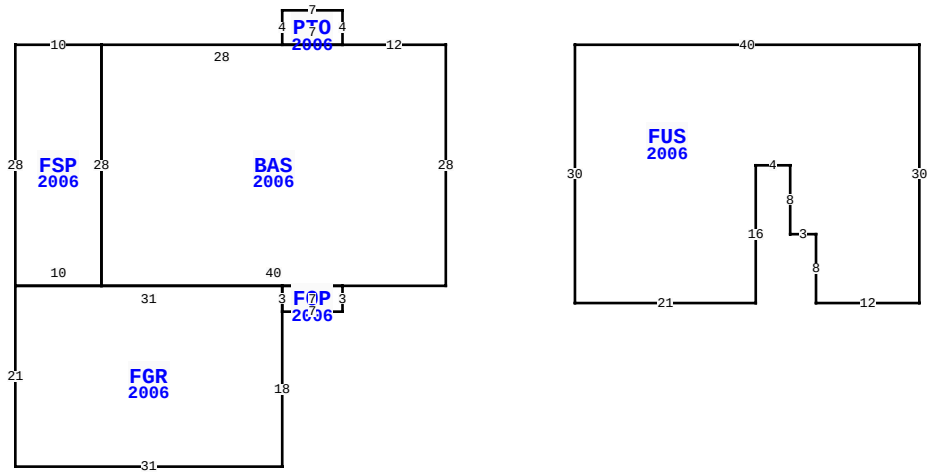

87057 KIPLING DR, YULEE

BLD DATE	04/04/2023 NW	LGL DATE	
XF DATE		LAND DATE	04/08/2026 MLU
INC DATE		AG DATE	

NASSAU COUNTY PROPERTY

PAGE 1 of 1 4

VALUATION SUMMARY

VALUATION BY		STANDARD
Tax Group: 4	Tax Dist:	
BUILDING MARKET VALUE		267,891
TOTAL MARKET OB/XF VALUE		0
TOTAL LAND VALUE - MARKET		65,000
TOTAL MARKET VALUE		332,891
SOH/AGL Deduction		145,893
ASSESSED VALUE		186,998
TOTAL EXEMPTION VALUE	HX HB	51,411
BASE TAXABLE VALUE		135,587
TOTAL JUST VALUE		332,891
NCON VALUE		0
INCOME VALUE		
PREVIOUS YEAR MKT VALUE		328,617

PERMIT NUM	DESCRIPTION	AMT	ISSUED
C15927	CO ISSUED	0	01/01/2006
B15927	NEW CONSTR	0	01/01/2006

SALES DATA

OFF RECORD Number	DATE	TYPE INST	Q U	V I	RSN CD	SALE PRICE
2051/1014	5/31/2016	WD	U	I	11	100
GRANTOR: PISANI LINDSAY						
GRANTEE: PISANI PAUL						
1458/0751	11/13/2006	WD	Q	I		235,700
GRANTOR: MARONDA HOMES INC						
GRANTEE: PISANI PAUL & LINDS						

BUILDING NOTES

BUILDING DIMENSIONS

BAS=[YR=2006] W12 PTO=[YR=2006] N4 W7 S4 E7$ W28
FSP=[YR=2006] W10 S28 FGR=[YR=2006] S21 E31 N18 FOP=[YR=2006]
E7 N3 W7 S3$ N3 W31$ E10 N28$ S28 E40 N28$ PTR=E15
FUS=[YR=2006] E40 S30 W12 N8 W3 N8 W4 S16 W21 N30$ W15$.

EXTRA FEATURES

LN	OB/XF CODE	DESCRIPTION	BLD	CAP	L	W	UNITS	UT	Adj R	ADJ UNIT PRICE	ORIG COND	YEAR ON	YEAR ACTUAL	Q	% COND	OB/XF MKT VALUE	NOTES

LAND DESCRIPTION

TOTAL OB/XF 0

LN	USE CODE	CLS	LAND USE DESCRIPTION	CAP	RD	LOC ZONE	FRONT	DEPTH	TOT LND UTS	UNIT TYPE	DT	DPTH FACT	% COND	TOT ADJ	UNIT PRICE	ADJ UNIT PRICE	LAND VALUE	OTHER ADJUSTMENTS AND NOTES	YEAR	DENSITY	DECL	FRZ	YR	CONSRV
1	000134	C	RES POND	100	0003		0.00	0.00	1.00	LT		1.00	1.00	1.00	65,000.00	65,000.00	65,000							

REVIEW DATE 01/01/2023 BY CD Total Acres: 0.00 Total Land Value: 65,000 Market: 0 Agricultural: 0 Common: 65,000 PRINTED 07/09/2026 BY SYS