LOT 14
CONSERV ESMT PT OR 1299/53
BELLS RIVER ESTATE #1 PB 7/90

SULLIVAN AMBER CHERIE & JORDAN TYLER
87002 KIP LN
YULEE, FL 32097

2026

37-3N-27-0134-0014-0000

BUILDING CHARACTERISTICS

ELEMENT	CD	CONSTRUCTION
Exterior Wall	16	WD FR STUC 50
Exterior Wall	17	CB STUCCO 50
Roof Structur	03	GABLE/HIP 100
Roof Cover	03	COMP SHNGL 100
Interior Wall	05	DRYWALL 100
Interior Floo	11	CLAY TILE 50
Interior Floo	13	LVT/LAMNT 50
Air Condition	03	CENTRAL 100
Heating Type	04	AIR DUCTED 100
Bedrooms		5 100
Bathrooms		2.5 100
Frame	03	MASONRY 100
Stories	2.	2. 100
Units		0 100
Occupancy	00	NONE 100
Quality	03	Quality Level 03

DOR CODE	0100	SINGLE FAMILY	
MAP NUM		MKT AREA	04
NEIGHBORHOOD/LOC	4055.00		

AREA TYPE	TOTAL GROSS AREA	PCT OF BASE	YEAR	TOT ADJ AREA	SUBAREA MARKET VALUE
BAS	1,256	100	2006	1,256	124,080
FGR	560	55	2006	308	30,427
FOP	12	30	2006	4	395
FUS	1,675	100	2006	1,675	165,473
USP	180	30	2006	54	5,335
TOTALS	3,683			3,297	325,710

MARKET ADJUSTMENTS

TYPE	MDL	EFF. AREA	TOT ADJ PTS	EFF. BASE RATE	REPL. COST NEW	AYB	EYB	ECON	FNCT		NORM	% COND
0100	01	3,297	103.9600	109.16	359,901	2006	2006	0	0	0	9.50	90.50

1 SINGLE FAM 100% - 2009 Heated Area: 2931 HX Base Yr 2009

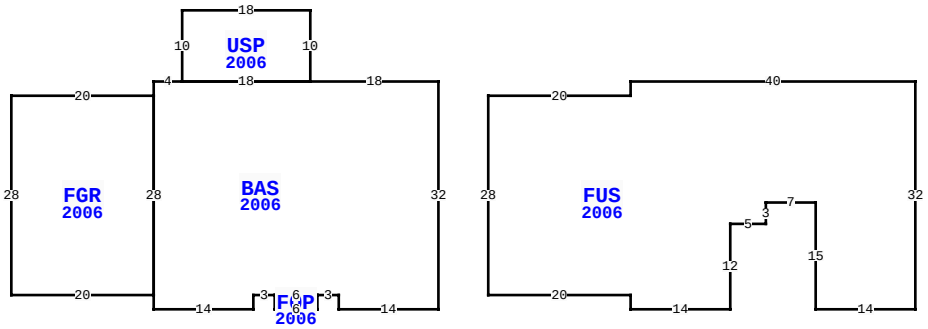

87002 KIP LN, YULEE

BLD DATE		LGL DATE	
XF DATE		LAND DATE	04/08/2026 MLU
INC DATE		AG DATE	

NASSAU COUNTY PROPERTY

PAGE 1 of 1 4

VALUATION SUMMARY

VALUATION BY		STANDARD
Tax Group: 4	Tax Dist:	
BUILDING MARKET VALUE		325,710
TOTAL MARKET OB/XF VALUE		0
TOTAL LAND VALUE - MARKET		65,000
TOTAL MARKET VALUE		390,710
SOH/AGL Deduction		156,249
ASSESSED VALUE		234,461
TOTAL EXEMPTION VALUE	HX HB WX	56,411
BASE TAXABLE VALUE		178,050
TOTAL JUST VALUE		390,710
NCON VALUE		0
INCOME VALUE		
PREVIOUS YEAR MKT VALUE		375,227

PERMIT NUM	DESCRIPTION	AMT	ISSUED
B15902	NEW CONSTR	0	02/17/2006

SALES DATA

OFF RECORD Number	DATE	TYPE INST	Q / U	V / I	RSN CD	SALE PRICE
2853/0557	3/11/2026	WD	Q	I	01	415,600
GRANTOR: HARTMAN MELINDA						
GRANTEE: SULLIVAN AMBER CHER						
2568/0162	3/23/2022	QC	U	I	11	70,000
GRANTOR: HARTMAN KENNEDY & COL						
GRANTEE: HARTMAN MELINDA						

BUILDING NOTES

BUILDING DIMENSIONS

FUS=[YR=2006;ORIG=7,2] E20 N2 E40 S32 W14 N15 W7 S3 W5 S12 W14 N2 W20 N28 $
BAS=[YR=2006;ORIG=0,0] W18 W18 W4 S2 S28 S2 E14 N2 E3 E6 E3 S2 E14 N32 $
FGR=[YR=2006;ORIG=-60,2] S28 E20 N28 W20 $
USP=[YR=2006;ORIG=-18,0] N10 W18 S10 E18 $
FOP=[YR=2006;ORIG=-23,30] S2 E6 N2 W6 $
.

EXTRA FEATURES

LN	OB/XF CODE	DESCRIPTION	BLD	CAP	L	W	UNITS	UT	Adj R	ADJ UNIT PRICE	ORIG COND	YEAR ON	YEAR ACTUAL	Q	% COND	OB/XF MKT VALUE	NOTES

LAND DESCRIPTION

TOTAL OB/XF 0

LN	USE CODE	CLS	LAND USE DESCRIPTION	CAP	RD	LOC ZONE	FRONT	DEPTH	TOT LND UTS	UNIT TYPE	DT	DPTH FACT	% COND	TOT ADJ	UNIT PRICE	ADJ UNIT PRICE	LAND VALUE	OTHER ADJUSTMENTS AND NOTES	YEAR	DENSITY	DECL	FRZ	YR	CONSRV
1	000100	C	RES	100	0003	PUD	0.00	0.00	1.00	LT		1.00	1.00	1.00	65,000.00	65,000.00	65,000							

REVIEW DATE 04/22/2024 BY KWA Total Acres: 0.00 Total Land Value: 65,000 Market: 0 Agricultural: 0 Common: 65,000 PRINTED 07/09/2026 BY SYS