LOT 206
IN OR 1151/456
PINEY ISLAND I PB 4/69

SCHEFF WILLIAM P & JEAN G
91033 FIDDLER DR
FERNANDINA BEACH, FL 32034

2026

37-2N-28-5000-0206-0000

NASSAU COUNTY PROPERTY

BUILDING CHARACTERISTICS

ELEMENT	CD	CONSTRUCTION
Exterior Wall	05	AVERAGE 100
Roof Structur	08	IRREGULAR 100
Roof Cover	03	COMP SHNGL 100
Interior Wall	05	DRYWALL 100
Interior Floo	14	CARPET 100
Air Condition	03	CENTRAL 100
Heating Type	04	AIR DUCTED 100
Bedrooms		4 100
Bathrooms		3 100
Frame	02	WOOD FRAME 100
Stories	2.	2. 100
Units		0 100
BUD8 Adjustme	04	DIST 01 100
Occupancy	00	NONE 100
Quality	04	Quality Level 04

DOR CODE 0100 SINGLE FAMILY
MAP NUM | MKT AREA 04
NEIGHBORHOOD/LOC 4016.00

AREA TYPE	TOTAL GROSS AREA	PCT OF BASE	YEAR	TOT ADJ AREA	SUBAREA MARKET VALUE
APT	702	100	2006	702	84,306
BAS	330	100	1993	330	39,631
BAS	1,113	100	1993	1,113	133,665
BAS	644	100	2006	644	77,341
DCK	225	10	1993	22	2,642
FOP	162	30	1993	49	5,885
FOP	56	30	2006	17	2,042
FUS	590	100	1993	590	70,856
PTO	108	5	2006	5	600
STR	28	10	1993	3	361
TOTALS	4,951			3,916	470,290

MARKET ADJUSTMENTS

TYPE	MDL	EFF. AREA	TOT ADJ PTS	EFF. BASE RATE	REPL. COST NEW	AYB	EYB	ECON	FNCT		NORM	% COND
0900	01	3,916	100.1700	139.24	545,264	1984	1997	0	0	0	13.75	86.25

1 SNGL FAM 100% - 2004 Heated Area: 3379 HX Base Yr 2004

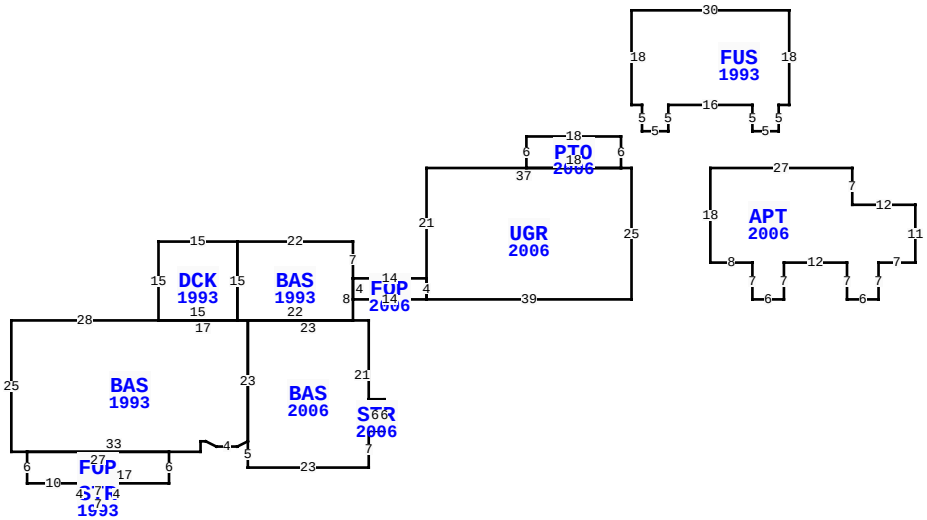

** This building has 12 Sub-Areas

91033 FIDDLER DR, FERNANDINA BEACH

BLD DATE		LGL DATE	
XF DATE		LAND DATE	04/15/2025 MLU
INC DATE		AG DATE	

VALUATION SUMMARY

VALUATION BY		STANDARD
Tax Group: 7	Tax Dist:	
BUILDING MARKET VALUE		628,990
TOTAL MARKET OB/XF VALUE		864
TOTAL LAND VALUE - MARKET		160,000
TOTAL MARKET VALUE		789,854
SOH/AGL Deduction		311,007
ASSESSED VALUE		478,847
TOTAL EXEMPTION VALUE	HX HB	51,411
BASE TAXABLE VALUE		427,436
TOTAL JUST VALUE		789,854
NCON VALUE		0
INCOME VALUE		
PREVIOUS YEAR MKT VALUE		615,293

PERMIT NUM	DESCRIPTION	AMT	ISSUED
B240000085	FREE STANDING BUI	132,536	01/03/2024
7495	ADDITION	11,550	08/29/1991

SALES DATA

OFF RECORD Number	DATE	TYPE INST	Q U	V I	RSN CD	SALE PRICE
1151/0456	7/07/2003	WD	Q	I		263,000
GRANTOR: BAKER CLAUDE EUGENE &						
GRANTEE: SCHEFF WILLIAM & JE						
0856/1393	11/24/1998	WD	U	I		168,000
GRANTOR: HOLLAND BURNELL & BET						
GRANTEE: BAKER CLAUDE & DEBR						

BUILDING NOTES

BUILDING DIMENSIONS

UGR=[YR=2006] W2 PTO=[YR=2006] N6 W18 S6 E18 $ W37 S21 FOP=[YR=2006] W14 BAS=[YR=1993] N7 W22 DCK=[YR=1993] W15 S15 BAS=[YR=1993] W28 S25 E3 FOP=[YR=1993] S6 E10 STR=[YR=1993] S4 E7 N4 W7 $ E17 N6 W27 $ E33 N2 E1 D1 R2 E4 U1 R2 BAS=[YR=2006] S5 E23 N7 STR=[YR=2006] E3 N6 W3 S6 $ N21 W23 S23 $ N23 W17 $ E15 N15 $ S15 E22 N8 $ S4 E14 N4 $ S4 E39 N25 $ PTR= E15 APT=[YR=2006] E27 S7 E12 S11 W7 S7 W6 N7 W12 S7 W6 N7 W8 N18 $ W15 $ PTR= N30 FUS=[YR=1993] E30 S18 W2 S5 W5 N5 W16 S5 W5 N5 W2 N18 $ S30 $.

EXTRA FEATURES

LN	OB/XF CODE	DESCRIPTION	BLD	CAP	L	W	UNITS	UT	Adj R	ADJ UNIT PRICE	ORIG COND	YEAR ON	YEAR ACTUAL	Q	% COND	OB/XF MKT VALUE	NOTES
2	0940	SHEDS/PORT	0	100	9	16	144.00	SF	30.00	30.00	100	1989	1989	3	20	864	

LAND DESCRIPTION

TOTAL OB/XF 864

LN	USE CODE	CLS	LAND USE DESCRIPTION	CAP	RD	LOC ZONE	FRONT	DEPTH	TOT LND UTS	UNIT TYPE	DT	DPTH FACT	% COND	TOT ADJ	UNIT PRICE	ADJ UNIT PRICE	LAND VALUE	OTHER ADJUSTMENTS AND NOTES	YEAR	DENSITY	DECL	FRZ	YR	CONSRV
1	000100	C	RES	100		RSF-1	0.00	0.00	1.00	LT		1.00	1.00	1.00	160,000.00	160,000.00	160,000							

REVIEW DATE 12/30/2025 BY NW Total Acres: 0.00 Total Land Value: 160,000 Market: 0 Agricultural: 0 Common: 160,000 PRINTED 07/09/2026 BY SYS

LOT 206
IN OR 1151/456
PINEY ISLAND I PB 4/69

SCHEFF WILLIAM P & JEAN G
91033 FIDDLER DR
FERNANDINA BEACH, FL 32034

2026

37-2N-28-5000-0206-0000

BUILDING CHARACTERISTICS

ELEMENT	CD	CONSTRUCTION
Exterior Wall	31	HARDIE BRD 100
Roof Structur	03	GABLE/HIP 100
Roof Cover	03	COMP SHNGL 100
Interior Wall	05	DRYWALL 100
Interior Floo	13	LVT/LAMNT 70
Interior Floo	14	CARPET 30
Air Condition	03	CENTRAL 100
Heating Type	04	AIR DUCTED 100
Bedrooms		2 100
Bathrooms		2 100
Frame	02	WOOD FRAME 100
Stories	1.	1. 100
Units		0 100
Quality	04	Quality Level 04
DOR CODE	0100	SINGLE FAMILY
MAP NUM		MKT AREA 04
NEIGHBORHOOD/LOC	4016.00	

AREA TYPE	TOTAL GROSS AREA	PCT OF BASE	YEAR	TOT ADJ AREA	SUBAREA MARKET VALUE
BAS	792	100	2026	792	149,276
DCK	12	10	2026	1	188
FOP	144	30	2026	43	8,105
STR	20	10	2026	2	377
STR	40	10	2026	4	754
TOTALS	1,008			842	158,700

MARKET ADJUSTMENTS

TYPE	MDL	EFF. AREA	TOT ADJ PTS	EFF. BASE RATE	REPL. COST NEW	AYB	EYB	ECON	FNCT		NORM	% COND
0900	01	842	135.5970	188.48	158,700	2025	2025	0	0	0	0.00	100.00

2 SNGL FAM 100% - 2026 Heated Area: 792 HX Base Yr 2004

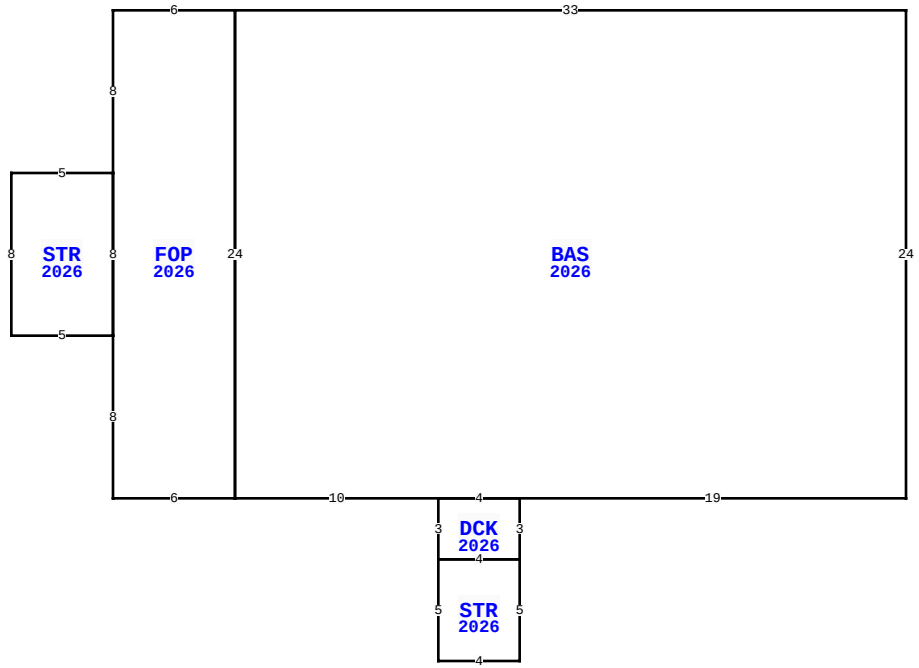

91033 FIDDLER DR, FERNANDINA BEACH

BLD DATE		LGL DATE	
XF DATE		LAND DATE	04/15/2025 MLU
INC DATE		AG DATE	

NASSAU COUNTY PROPERTY

PAGE 2 of 2 7

VALUATION SUMMARY

VALUATION BY		STANDARD
Tax Group: 7	Tax Dist:	
BUILDING MARKET VALUE		628,990
TOTAL MARKET OB/XF VALUE		864
TOTAL LAND VALUE - MARKET		160,000
TOTAL MARKET VALUE		789,854
SOH/AGL Deduction		311,007
ASSESSED VALUE		478,847
TOTAL EXEMPTION VALUE	HX HB	51,411
BASE TAXABLE VALUE		427,436
TOTAL JUST VALUE		789,854
NCON VALUE		0
INCOME VALUE		
PREVIOUS YEAR MKT VALUE		615,293

PERMIT NUM	DESCRIPTION	AMT	ISSUED

SALES DATA

OFF RECORD Number	DATE	TYPE INST	Q / U	V / I	RSN CD	SALE PRICE
1151/0456	7/07/2003	WD	Q	I		263,000
GRANTOR: BAKER CLAUDE EUGENE &						
GRANTEE: SCHEFF WILLIAM & JE						
0856/1393	11/24/1998	WD	U	I		168,000
GRANTOR: HOLLAND BURNELL & BET						
GRANTEE: BAKER CLAUDE & DEBR						

BUILDING NOTES

BUILDING DIMENSIONS

BAS=[YR=2026;ORIG=40,10] E33 S24 W19 W4 W10 N24 $
DCK=[YR=2026;ORIG=50,34] E4 S3 W4 N3 $
STR=[YR=2026;ORIG=50,37] E4 S5 W4 N5 $
FOP=[YR=2026;ORIG=40,10] W6 S8 S8 S8 E6 N24 $
STR=[YR=2026;ORIG=34,18] W5 S8 E5 N8 $
.

EXTRA FEATURES

L N	OB/XF CODE	DESCRIPTION	BLD	CAP	L	W	UNITS	UT	Adj R	ADJ UNIT PRICE	ORIG COND	YEAR ON	YEAR ACTUAL	Q	% COND	OB/XF MKT VALUE	NOTES

LAND DESCRIPTION

TOTAL OB/XF 0

L N	USE CODE	CLS	LAND USE DESCRIPTION	CAP	R D	LOC ZONE	FRONT	DEPTH	TOT LND UTS	UNIT TYPE	D T	DPTH FACT	% COND	TOT ADJ	UNIT PRICE	ADJ UNIT PRICE	LAND VALUE	OTHER ADJUSTMENTS AND NOTES	YEAR	DENSITY	DECL	FRZ	YR	CONSRV

REVIEW DATE 12/30/2025 BY NW Total Acres: 0.00 Total Land Value: 160,000 Market: 0 Agricultural: 0 Common: 160,000 PRINTED 07/09/2026 BY SYS