TRACT 13
IN OR 2021/1228
5TH AMENDMENT REC ESMT &

YULEE JASZ INC
6767 PHILIPS INDUSTRIAL BLVD
JACKSONVILLE, FL 32256-2728

2026

37-2N-27-1950-0013-0000

NASSAU COUNTY PROPERTY

BUILDING CHARACTERISTICS

ELEMENT	CD	CONSTRUCTION
Exterior Wall	16	WD FR STUC 50
Exterior Wall	31	HARDIE BRD 50
Roof Structur	09	RIDGE FRME 100
Roof Cover	04	BUILT-UP 70
Roof Cover	12	MODULAR MT 30
Interior Wall	05	DRYWALL 50
Interior Wall	08	DECORATIVE 50
Interior Floo	03	CONC FINSH 50
Interior Floo	11	CLAY TILE 50
Ceiling	01	FIN.SUSPD 50
Ceiling	04	NONE 50
Air Condition	04	ROOF TOP 100
Heating Type	04	AIR DUCTED 100
Fixtures		15 100
Frame	08	METAL STUD 100
Story Height		13 100
RMS		4 100
Stories	1.	1. 100
Quality	03	Quality Level 03
DOR CODE	2200	FAST FOOD
MAP NUM		MKT AREA 04
NEIGHBORHOOD/LOC	4058.00	

AREA TYPE	TOTAL GROSS AREA	PCT OF BASE	YEAR	TOT ADJ AREA	SUBAREA MARKET VALUE
BAS	120	100	2016	120	26,955
BAS	252	100	2016	252	56,606
BAS	3,270	100	2016	3,270	734,532
CAN	21	30	2016	6	1,348
CAN	24	30	2016	7	1,572
CAN	39	30	2016	12	2,695
CAN	40	30	2016	12	2,695
CAN	57	30	2016	17	3,819
PTO	850	5	2016	42	9,434
TOTALS	4,673			3,738	839,658

MARKET ADJUSTMENTS

TYPE	MDL	EFF. AREA	TOT ADJ PTS	EFF. BASE RATE	REPL. COST NEW	AYB	EYB	ECON	FNCT		NORM	% COND
2201	04	3,738	110.1029	236.45	883,850	2016	2016	0	0	0	5.00	95.00

1 FAST FOOD 0% - 0 Heated Area: 3642 HX Base Yr

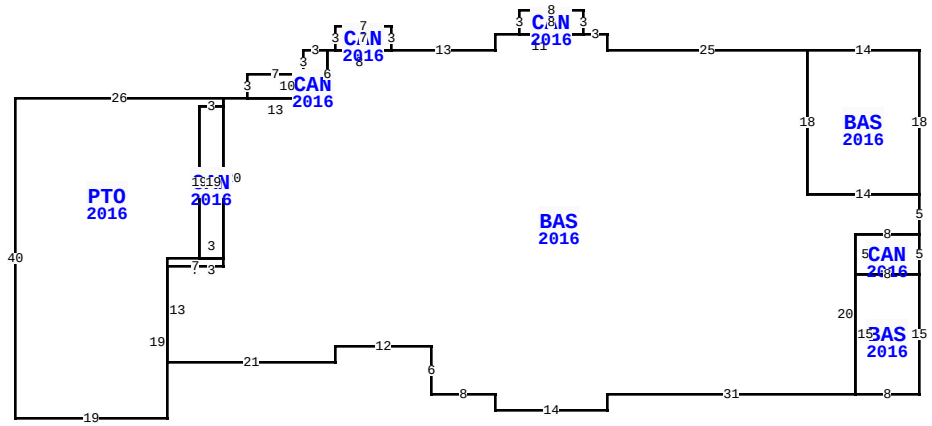

BLD DATE	10/23/2024 KW	LGL DATE	
XF DATE		LAND DATE	03/23/2026 DC
INC DATE		AG DATE	

463769 SR 200, YULEE

EXTRA FEATURES

LN	OB/XF CODE	DESCRIPTION	BLD	CAP	L	W	UNITS	UT	Adj R	ADJ UNIT PRICE	ORIG COND	YEAR ON	YEAR ACTUAL	Q	% COND	OB/XF MKT VALUE	NOTES
1	0803	ASPHALT C	0	0	0	0	12,339.00	SF	2.00	2.00	100	2016	2016	3	74	18,262	
2	0811	CONCRETE B	0	0	0	0	344.00	SF	5.20	5.20	100	2016	2016	3	95	1,699	
3	0400	CONC CURB	0	0	0	0	1,285.00	LF	15.00	15.00	100	2016	2016	3	96	18,504	
4	0464	FNC GT 10'	0	0	0	0	24.00	UT	350.00	350.00	100	2016	2016	3	87	7,308	
5	0940	SHEDS/PORT	0	0	15	21	315.00	SF	45.00	45.00	100	2016	2016	3	65	9,214	
6	1075	TRELLIS G	0	0	21	16	336.00	SF	35.00	35.00	100	2016	2016	3	75	8,820	

VALUATION SUMMARY

VALUATION BY	STANDARD
Tax Group: 4	Tax Dist:
BUILDING MARKET VALUE	839,658
TOTAL MARKET OB/XF VALUE	63,807
TOTAL LAND VALUE - MARKET	680,394
TOTAL MARKET VALUE	1,583,859
SOH/AGL Deduction	457,532
ASSESSED VALUE	1,126,327
TOTAL EXEMPTION VALUE	0
BASE TAXABLE VALUE	1,126,327
TOTAL JUST VALUE	1,583,859
NCON VALUE	0
INCOME VALUE	1803757
PREVIOUS YEAR MKT VALUE	1,506,943

ZAXBYS RESTAURANT

ALSO PARKING LOT PRCL : 37-2N-27-1950-0014-0000

PERMIT NUM	DESCRIPTION	AMT	ISSUED
R1614866	NEW CONSTR/ROOF	54,239	02/01/2016
B1631616	NEW CONSTR 4/13/1	482,291	01/01/2016

SALES DATA

OFF RECORD Number	DATE	TYPE INST	Q U	V I	RSN CD	SALE PRICE
2021/1228	1/04/2016	WD	Q	V	01	407,400
GRANTOR: KD NASSAU OUTPARCELS						
GRANTEE: YULEE JASZ INC						
1362/1020	10/27/2005	QC	Q	V	06	100
GRANTOR: DUDLEY JOHNNY L &						
GRANTEE: KD NASSAU OUTPARCEL						

BUILDING NOTES

BUILDING DIMENSIONS

BAS=[YR=2016] W14 BAS=[YR=2016] W25 N2 W3 CAN=[YR=2016] N3 W8 S3 E8 $ W11 S2 W13 CAN=[YR=2016] N3 W7 S3 E7 $ W8 CAN=[YR=2016] W3 S3 W7 S3 E10 N6 $ S6 W13 PTO=[YR=2016] W26 S40 E19 N19 E7 N1 CAN=[YR=2016] W3 N19 E3 S19 $ W3 N19 E3 N1 $ S20 W7 S13 E21 N2 E12 S6 E8 S2 E14 N2 E31 BAS=[YR=2016] E8 N15 CAN=[YR=2016] N5 W8 S5 E8 $ W8 S15 $ N20 E8 N5 W14 N18 $ S18 E14 N18$.

LAND DESCRIPTION

TOTAL OB/XF 63,807

LN	USE CODE	CLS	LAND USE DESCRIPTION	CAP	RD	LOC ZONE	FRONT	DEPTH	TOT LND UTS	UNIT TYPE	DT	DPTH FACT	% COND	TOT ADJ	UNIT PRICE	ADJ UNIT PRICE	LAND VALUE	OTHER ADJUSTMENTS AND NOTES	YEAR	DENSITY	DECL	FRZ	YR	CONSRV
1	002200	C	DRIVE-IN	0		IW	0.00	0.00	30,927.00	SF		1.00	1.00	1.00	22.00	22.00	680,394							

REVIEW DATE 01/01/2023 BY CD Total Acres: 0.00 Total Land Value: 680,394 Market: 0 Agricultural: 0 Common: 680,394 PRINTED 07/09/2026 BY SYS