BLOCK 1 LOT 15
PT OR 2382/393
GREEN ACRES UNR

CALLAHAN COUNTRY RV RESORT LLC
405 GOLFWAY WEST DRIVE, SUITE 300
ST AUGUSTINE, FL 32095

2026

37-1N-25-2950-0001-0150

NASSAU COUNTY PROPERTY

BUILDING CHARACTERISTICS

ELEMENT	CD	CONSTRUCTION
Exterior Wall	30	VINYL 100
Roof Structur	03	GABLE/HIP 100
Roof Cover	03	COMP SHNGL 100
Interior Wall	05	DRYWALL 100
Interior Floo	13	LVT/LAMNT 100
Air Condition	03	CENTRAL 100
Heating Type	04	AIR DUCTED 100
Bedrooms		4 100
Bathrooms		2 100
Frame	02	WOOD FRAME 100
Stories	1.	1. 100
Units		0 100
BUD8 Adjustme	06	DIST 1D 100
Occupancy	00	NONE 100
Quality	05	Quality Level 05

DOR CODE	0100	SINGLE FAMILY	
MAP NUM		MKT AREA	08
NEIGHBORHOOD/LOC	8026.00		

AREA TYPE	TOTAL GROSS AREA	PCT OF BASE	YEAR	TOT ADJ AREA	SUBAREA MARKET VALUE
BAS	1,803	100	1993	1,803	193,416
DCK	104	10	2009	10	1,073
FGR	600	55	2001	330	35,401
FOP	21	30	1993	6	644
FOP	88	30	1993	26	2,790
TOTALS	2,616			2,175	233,322

MARKET ADJUSTMENTS

TYPE	MDL	EFF. AREA	TOT ADJ PTS	EFF. BASE RATE	REPL. COST NEW	AYB	EYB	ECON	FNCT		NORM	% COND
0100	01	2,175	116.4240	122.25	265,894	1983	2000	0	0	0	12.25	87.75

1 SINGLE FAM 0% - 0 Heated Area: 1803 HX Base Yr

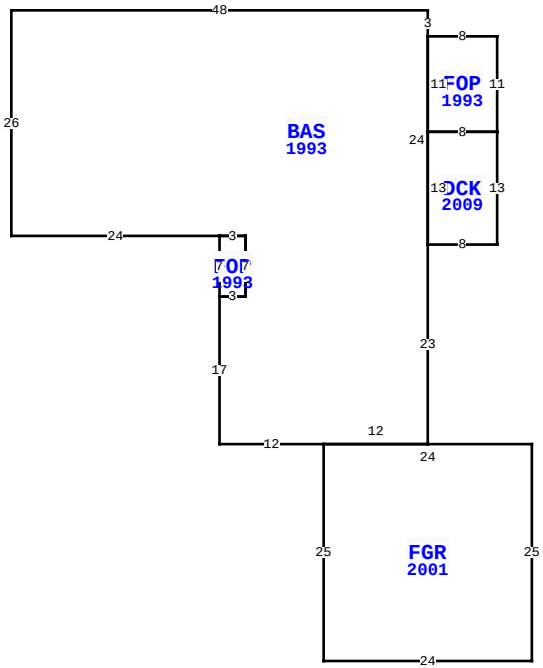

4000 CALLAHAN CLUB BLVD, CALLAHAN

BLD DATE		LGL DATE	
XF DATE		LAND DATE	05/07/2026 MLU
INC DATE		AG DATE	

VALUATION SUMMARY

VALUATION BY	STANDARD
Tax Group: 6	Tax Dist:
BUILDING MARKET VALUE	233,322
TOTAL MARKET OB/XF VALUE	0
TOTAL LAND VALUE - MARKET	51,000
TOTAL MARKET VALUE	284,322
SOH/AGL Deduction	0
ASSESSED VALUE	284,322
TOTAL EXEMPTION VALUE	0
BASE TAXABLE VALUE	284,322
TOTAL JUST VALUE	284,322
NCON VALUE	0
INCOME VALUE	
PREVIOUS YEAR MKT VALUE	265,361

PERMIT NUM	DESCRIPTION	AMT	ISSUED
V010130	REMODEL	5,250	03/01/2001
B941307	NEW CONSTR	9,792	10/01/1994

SALES DATA

OFF RECORD Number	DATE	TYPE INST	Q U	V I	RSN CD	SALE PRICE
2513/0938	11/09/2021	MS	U	I	11	0
GRANTOR: GREENE & GROGAN PROPE						
GRANTEE: CALLAHAN COUNTRY RV						
2382/0393	8/06/2020	WD	U	I	11	100
GRANTOR: ANGEL LAKES GATED INC						
GRANTEE: GREENE & GROGAN PRO						

BUILDING NOTES

BUILDING DIMENSIONS

BAS=[YR=1993;ORIG=-8,0] N3 W48 S26 E24 E3 S7 W3 S17 E12 E12 N23 N24 $
FGR=[YR=2001;ORIG=-20,47] S25 E24 N25 W24 $
DCK=[YR=2009;ORIG=-8,24] E8 N13 W8 S13 $
FOP=[YR=1993;ORIG=0,0] W8 S11 E8 N11 $
FOP=[YR=1993;ORIG=-32,23] S7 E3 N7 W3 $
.

EXTRA FEATURES

LN	OB/XF CODE	DESCRIPTION	BLD	CAP	L	W	UNITS	UT	Adj R	ADJ UNIT PRICE	ORIG COND	YEAR ON	YEAR ACTUAL	Q	% COND	OB/XF MKT VALUE	NOTES

LAND DESCRIPTION

TOTAL OB/XF 0

LN	USE CODE	CLS	LAND USE DESCRIPTION	CAP	RD	LOC ZONE	FRONT	DEPTH	TOT LND UTS	UNIT TYPE	DT	DPTH FACT	% COND	TOT ADJ	UNIT PRICE	ADJ UNIT PRICE	LAND VALUE	OTHER ADJUSTMENTS AND NOTES	YEAR	DENSITY	DECL	FRZ	YR	CONSRV
1	000100	C	RES	0	0006	RSF-2	0.00	0.00	1.00	LT		1.00	1.00	1.00	51,000.00	51,000.00	51,000							

REVIEW DATE 01/01/2023 BY CD Total Acres: 0.00 Total Land Value: 51,000 Market: 0 Agricultural: 0 Common: 51,000 PRINTED 07/09/2026 BY SYS