PT GOVT LOT 1
IN OR 2726/1132 PAR 1 & 2
ESMT IN OR 2746-1024

FOREMAN WAYNE
36684 DYAL RD
CALLAHAN, FL 32011

2026

36-3N-24-0000-0008-0020

NASSAU COUNTY PROPERTY

BUILDING CHARACTERISTICS

ELEMENT	CD	CONSTRUCTION
Exterior Wall	31	HARDIE BRD 100
Roof Structur	03	GABLE/HIP 100
Roof Cover	12	MODULAR MT 100
Interior Wall	05	DRYWALL 100
Interior Floo	13	LVT/LAMNT 100
Interior Floo	01	NONE 0
Air Condition	03	CENTRAL 100
Heating Type	04	AIR DUCTED 100
Bedrooms		4 100
Bathrooms		3 100
Frame	02	WOOD FRAME 100
Stories	1.	1. 100
Units		0 100
Quality	04	Quality Level 04

DOR CODE 0100 SINGLE FAMILY
MAP NUM | MKT AREA 09
NEIGHBORHOOD/LOC 9001.00

AREA TYPE	TOTAL GROSS AREA	PCT OF BASE	YEAR	TOT ADJ AREA	SUBAREA MARKET VALUE
BAS	2,298	100	2026	2,298	363,842
FOP	224	30	2026	67	10,608
PTO	828	5	2026	41	6,492
STR	60	10	2026	6	950
UAT	1,180	10	2026	118	18,683
UCP	500	20	2026	100	15,833
TOTALS	5,090			2,630	416,408

MARKET ADJUSTMENTS

TYPE	MDL	EFF. AREA	TOT ADJ PTS	EFF. BASE RATE	REPL. COST NEW	AYB	EYB	ECON	FNCT		NORM	% COND
0900	01	2,630	113.9040	158.33	416,408	2025	2025	0	0	0	0.00	100.00

1 SNGL FAM 100% - 2026 Heated Area: 2298 HX Base Yr 2026

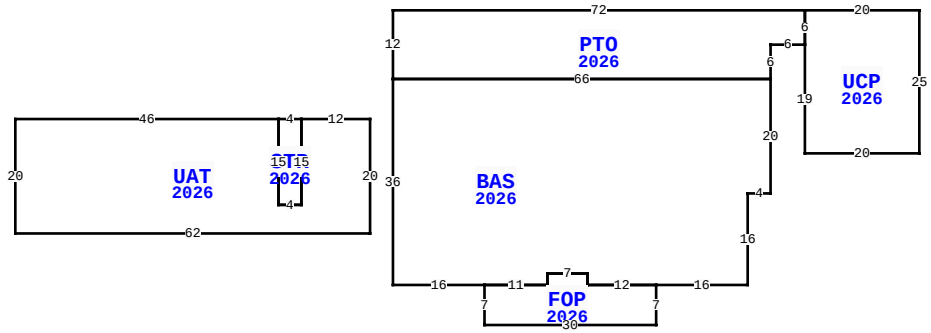

36684 DYAL RD, CALLAHAN

BLD DATE		LGL DATE	
XF DATE		LAND DATE	05/12/2026 MLU
INC DATE		AG DATE	

NASSAU COUNTY PROPERTY — VALUATION SUMMARY

VALUATION BY		STANDARD
Tax Group: 4	Tax Dist:	
BUILDING MARKET VALUE		416,408
TOTAL MARKET OB/XF VALUE		5,000
TOTAL LAND VALUE - MARKET		187,000
TOTAL MARKET VALUE		608,408
SOH/AGL Deduction		122,381
ASSESSED VALUE		486,027
TOTAL EXEMPTION VALUE	HX HB	51,411
BASE TAXABLE VALUE		434,616
TOTAL JUST VALUE		608,408
NCON VALUE		421,408
INCOME VALUE		
PREVIOUS YEAR MKT VALUE		182,500

PERMIT NUM	DESCRIPTION	AMT	ISSUED
B240012082	PRIVATE PROVIDER	430,936	10/28/2024
CO250006669			

SALES DATA

OFF RECORD Number	DATE	TYPE INST	Q / U	V / I	RSN CD	SALE PRICE
9999/9999	6/18/2024	CN	Q	I	01	197,500
GRANTOR: FRIES GLENDA						
GRANTEE: FOREMAN WAYNE						
1425/0877	7/03/2006	PR	Q	I	06	100
GRANTOR: ERWIN MARY C P/R						
GRANTEE: ERWIN MARY C ETAL						

BUILDING NOTES

EXTRA FEATURES

LN	OB/XF CODE	DESCRIPTION	BLD	CAP	L	W	UNITS	UT	Adj R	ADJ UNIT PRICE	ORIG COND	YEAR ON	YEAR ACTUAL	Q	% COND	OB/XF MKT VALUE	NOTES
3	0501	FP-AVERAGE	0	100	0	0	1.00	UT	5,000.00	5,000.00	100	2026	2025		100	5,000	

BUILDING DIMENSIONS

BAS=[YR=2026;ORIG=120,0] W66 S36 E16 E11 N2 E7 S2 E12 E16 N16 E4 N20 $
FOP=[YR=2026;ORIG=70,36] E11 N2 E7 S2 E12 S7 W30 N7 $
PTO=[YR=2026;ORIG=54,-12] E72 S6 W6 S6 W66 N12 $
UCP=[YR=2026;ORIG=126,-12] E20 S25 W20 N19 N6 $
UAT=[YR=2026;ORIG=-12,7] S20 E62 N20 W12 S15 W4 N15 W46 $
STR=[YR=2026;ORIG=34,7] E4 S15 W4 N15 $
.

LAND DESCRIPTION

TOTAL OB/XF 5,000

LN	USE CODE	CLS	LAND USE DESCRIPTION	CAP	RD	LOC ZONE	FRONT	DEPTH	TOT LND UTS	UNIT TYPE	DT	DPTH FACT	% COND	TOT ADJ	UNIT PRICE	ADJ UNIT PRICE	LAND VALUE	OTHER ADJUSTMENTS AND NOTES	YEAR	DENSITY	DECL	FRZ	YR	CONSRV
1	000100	C	RES	100	0005	OR	0.00	0.00	11.00	AC		1.00	1.00	1.00	17,000.00	17,000.00	187,000							

REVIEW DATE 08/12/2025 BY WW Total Acres: 11.00 Total Land Value: 187,000 Market: 0 Agricultural: 0 Common: 187,000 PRINTED 07/09/2026 BY SYS