IN OR 85 PG 247

TIMMONS ANNA B
58230 TIMMONS ROAD
HILLIARD, FL 32046

2026

35-4N-25-0000-0008-0010

NASSAU COUNTY PROPERTY

BUILDING CHARACTERISTICS

ELEMENT	CD	CONSTRUCTION
Exterior Wall	19	COMMON BRK 100
Roof Structur	03	GABLE/HIP 100
Roof Cover	03	COMP SHNGL 100
Interior Wall	05	DRYWALL 100
Interior Floo	14	CARPET 80
Interior Floo	08	SHT VINYL 20
Air Condition	03	CENTRAL 100
Heating Type	04	AIR DUCTED 100
Bedrooms		4 100
Bathrooms		2 100
Frame	02	WOOD FRAME 100
Stories	1.	1. 100
Units		0 100
BUD8 Adjustme	04	DIST 01 100
Occupancy	00	NONE 100
Quality	04	Quality Level 04
DOR CODE	0100	SINGLE FAMILY
MAP NUM		MKT AREA 05
NEIGHBORHOOD/LOC	5001.00	

AREA TYPE	TOTAL GROSS AREA	PCT OF BASE	YEAR	TOT ADJ AREA	SUBAREA MARKET VALUE
BAS	1,490	100	1993	1,490	115,785
BAS	208	100	1998	208	16,163
FGR	592	55	1993	326	25,333
FOP	58	30	1993	17	1,321
FST	80	55	1998	44	3,419
TOTALS	2,428			2,085	162,022

MARKET ADJUSTMENTS

TYPE	MDL	EFF. AREA	TOT ADJ PTS	EFF. BASE RATE	REPL. COST NEW	AYB	EYB	ECON	FNCT		NORM	% COND
0100	01	2,085	127.5960	133.98	279,348	1961	1961	0	0	0	42.00	58.00

1 SINGLE FAM 100% - 0 Heated Area: 1698 HX Base Yr

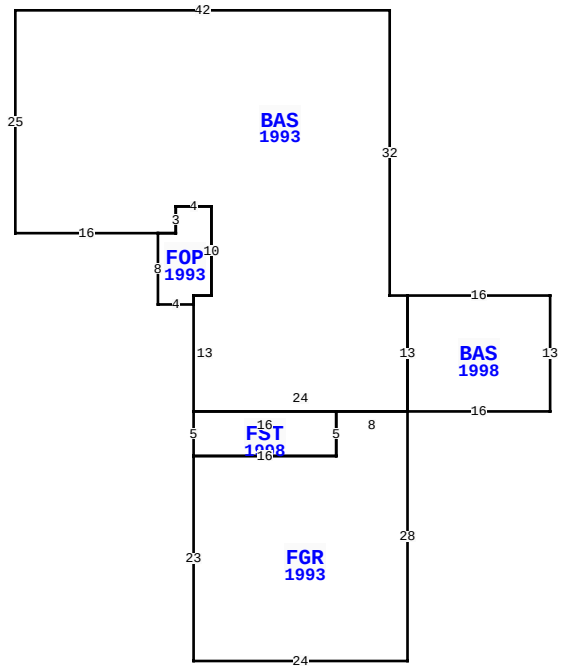

58230 TIMMONS RD, HILLIARD

BLD DATE		LGL DATE	
XF DATE		LAND DATE	05/08/2026 MLU
INC DATE		AG DATE	

VALUATION SUMMARY

VALUATION BY		STANDARD
Tax Group: 4	Tax Dist:	
BUILDING MARKET VALUE		168,118
TOTAL MARKET OB/XF VALUE		0
TOTAL LAND VALUE - MARKET		6,000
TOTAL MARKET VALUE		174,118
SOH/AGL Deduction		65,377
ASSESSED VALUE		108,741
TOTAL EXEMPTION VALUE	HX HB WX	56,411
BASE TAXABLE VALUE		52,330
TOTAL JUST VALUE		174,118
NCON VALUE		0
INCOME VALUE		
PREVIOUS YEAR MKT VALUE		211,658

PERMIT NUM	DESCRIPTION	AMT	ISSUED
B985196	REMODEL	17,500	07/01/1998

SALES DATA

OFF RECORD Number	DATE	TYPE INST	Q U /	V I /	RSN CD	SALE PRICE

BUILDING NOTES

BUILDING DIMENSIONS

BAS=[YR=1998] W16 BAS=[YR=1993] W2 N32 W42 S25 E16
FOP=[YR=1993] S8 E4 N1 E2 N10 W4 S3 W2 $ E2 N3 E4 S10 W2 S13
FST=[YR=1998] S5 FGR=[YR=1993] S23 E24 N28 W8 S5 W16 $ E16
N5 W16 $ E24 N13 $ S13 E16 N13 $.

EXTRA FEATURES

L N	OB/XF CODE	DESCRIPTION	BLD	CAP	L	W	UNITS	UT	Adj R	ADJ UNIT PRICE	ORIG COND	YEAR ON	YEAR ACTUAL	Q	% COND	OB/XF MKT VALUE	NOTES

LAND DESCRIPTION

TOTAL OB/XF 0

L N	USE CODE	CLS	LAND USE DESCRIPTION	CAP	R D	LOC ZONE	FRONT	DEPTH	TOT LND UTS	UNIT TYPE	D T	DPTH FACT	% COND	TOT ADJ	UNIT PRICE	ADJ UNIT PRICE	LAND VALUE	OTHER ADJUSTMENTS AND NOTES	YEAR	DENSITY	DECL	FRZ	YR	CONSRV
1	000100	C	RES	100	0005	OR	0.00	0.00	0.12	AC		1.00	1.00	1.00	50,000.00	50,000.00	6,000							

REVIEW DATE 01/01/2023 BY CD Total Acres: 0.12 Total Land Value: 6,000 Market: 0 Agricultural: 0 Common: 6,000 PRINTED 07/09/2026 BY SYS

IN OR 85 PG 247

TIMMONS ANNA B
58230 TIMMONS ROAD
HILLIARD, FL 32046

2026

35-4N-25-0000-0008-0010

NASSAU COUNTY PROPERTY

BUILDING CHARACTERISTICS

ELEMENT	CD	CONSTRUCTION
Exterior Wall	05	AVERAGE 100
Roof Structur	03	GABLE/HIP 100
Roof Cover	01	MINIMUM 100
Interior Wall	02	WALL BD/WD 100
Interior Floo	03	CONC FINSH 100
Air Condition	01	NONE 100
Heating Type	01	NONE 100
Bedrooms		0 100
Bathrooms		0 100
Frame	02	WOOD FRAME 100
Stories	1.	1. 100
Units		0 100
Occupancy	00	NONE 100
Quality	03	Quality Level 03

DOR CODE	0100	SINGLE FAMILY	
MAP NUM		MKT AREA	05
NEIGHBORHOOD/LOC	5001.00		

AREA TYPE	TOTAL GROSS AREA	PCT OF BASE	YEAR	TOT ADJ AREA	SUBAREA MARKET VALUE
BAS	204	100	1998	204	2,801
BAS	180	100	2012	180	2,472
FCP	108	25	1998	27	371
FCP	132	25	2012	33	453
TOTALS	624			444	6,096

MARKET ADJUSTMENTS

TYPE	MDL	EFF. AREA	TOT ADJ PTS	EFF. BASE RATE	REPL. COST NEW	AYB	EYB	ECON	FNCT		NORM	% COND
6500	01	444	70.4000	27.46	12,192	1969	1969	0	0	0	50.00	50.00

2 GARAGE RES 100% - 0 Heated Area: 384 HX Base Yr

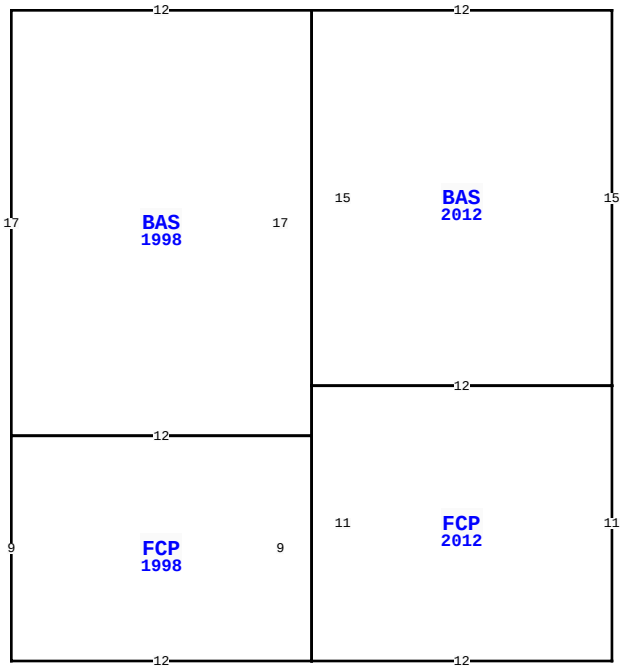

58230 TIMMONS RD, HILLIARD

BLD DATE		LGL DATE	
XF DATE		LAND DATE	05/08/2026 MLU
INC DATE		AG DATE	

VALUATION SUMMARY

VALUATION BY		STANDARD
Tax Group: 4	Tax Dist:	
BUILDING MARKET VALUE		168,118
TOTAL MARKET OB/XF VALUE		0
TOTAL LAND VALUE - MARKET		6,000
TOTAL MARKET VALUE		174,118
SOH/AGL Deduction		65,377
ASSESSED VALUE		108,741
TOTAL EXEMPTION VALUE	HX HB WX	56,411
BASE TAXABLE VALUE		52,330
TOTAL JUST VALUE		174,118
NCON VALUE		0
INCOME VALUE		
PREVIOUS YEAR MKT VALUE		211,658

PERMIT NUM	DESCRIPTION	AMT	ISSUED

SALES DATA

OFF RECORD Number	DATE	TYPE INST	Q U /	V I /	RSN CD	SALE PRICE

BUILDING NOTES

BUILDING DIMENSIONS

BAS=[YR=2012] W12 BAS=[YR=1998] W12 S17 FCP=[YR=1998] S9 E12 FCP=[YR=2012] E12 N11 W12 S11$ N9 W12$ E12 N17$ S15 E12 N15$.

EXTRA FEATURES

L N	OB/XF CODE	DESCRIPTION	BLD	CAP	L	W	UNITS	UT	Adj R	ADJ UNIT PRICE	ORIG COND	YEAR ON	YEAR ACTUAL	Q	% COND	OB/XF MKT VALUE	NOTES

LAND DESCRIPTION

TOTAL OB/XF 0

L N	USE CODE	CLS	LAND USE DESCRIPTION	CAP	R D	LOC ZONE	FRONT	DEPTH	TOT LND UTS	UNIT TYPE	D T	DPTH FACT	% COND	TOT ADJ	UNIT PRICE	ADJ UNIT PRICE	LAND VALUE	OTHER ADJUSTMENTS AND NOTES	YEAR	DENSITY	DECL	FRZ	YR	CONSRV

REVIEW DATE 01/01/2023 BY CD Total Acres: 0.12 Total Land Value: 6,000 Market: 0 Agricultural: 0 Common: 6,000 PRINTED 07/09/2026 BY SYS