LOT 6
RESERVE AT DEER RUN #1 PB 8/24

DOWNS WILLIAM M JR & MAGGIE N
55206 BARTRAM TR
CALLAHAN, FL 32011

2026

35-3N-25-1810-0006-0000

NASSAU COUNTY PROPERTY

BUILDING CHARACTERISTICS

ELEMENT	CD	CONSTRUCTION
Exterior Wall	31	HARDIE BRD 100
Roof Structur	08	IRREGULAR 100
Roof Cover	03	COMP SHNGL 100
Interior Wall	05	DRYWALL 100
Interior Floo	13	LVT/LAMNT 70
Interior Floo	14	CARPET 30
Air Condition	03	CENTRAL 100
Heating Type	04	AIR DUCTED 100
Bedrooms		4 100
Bathrooms		3 100
Frame	02	WOOD FRAME 100
Stories	1.5	1.5 100
Units		0 100
Occupancy	00	NONE 100
Quality	03	Quality Level 03
DOR CODE	0100	SINGLE FAMILY
MAP NUM		MKT AREA 05
NEIGHBORHOOD/LOC	5012.00	

AREA TYPE	TOTAL GROSS AREA	PCT OF BASE	YEAR	TOT ADJ AREA	SUBAREA MARKET VALUE
BAL	72	15	2020	11	1,489
BAS	467	100	2020	467	63,207
BAS	2,312	100	2020	2,312	312,924
FGR	745	55	2020	410	55,493
FOP	162	30	2020	49	6,632
FSP	228	40	2020	91	12,317
FST	48	55	2020	26	3,519
FUS	288	100	2020	288	38,980
PTO	72	5	2020	4	541
STR	76	10	2020	8	1,083
TOTALS	4,470			3,666	496,185

MARKET ADJUSTMENTS

TYPE	MDL	EFF. AREA	TOT ADJ PTS	EFF. BASE RATE	REPL. COST NEW	AYB	EYB	ECON	FNCT		NORM	% COND
0900	01	3,666	99.3600	138.11	506,311	2020	2020	0	0	0	2.00	98.00

1 SNGL FAM 100% - 2025 Heated Area: 3067 HX Base Yr 2025

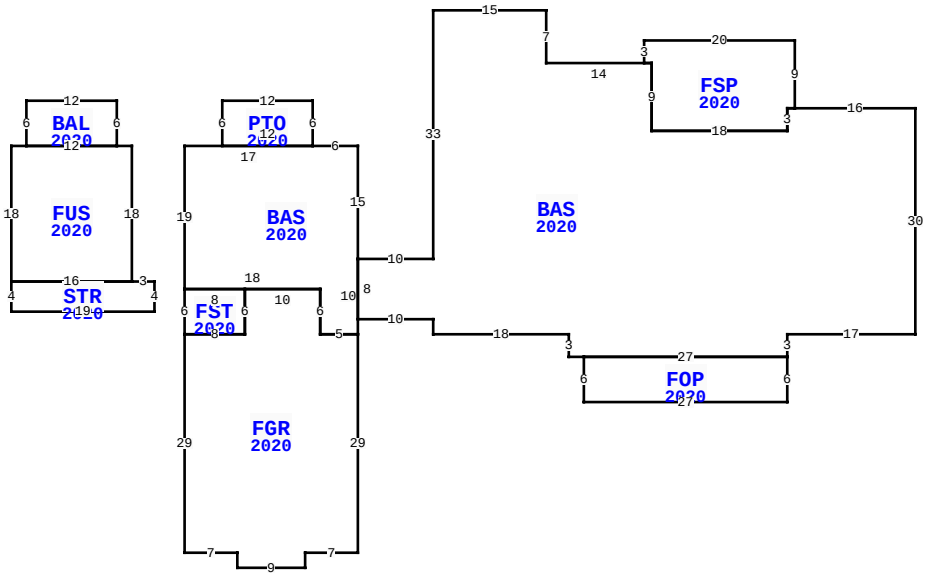

55206 BARTRAM TR, CALLAHAN

BLD DATE		LGL DATE	
XF DATE		LAND DATE	04/09/2026 MLU
INC DATE		AG DATE	

VALUATION SUMMARY

VALUATION BY		STANDARD
Tax Group: 4	Tax Dist:	
BUILDING MARKET VALUE		496,185
TOTAL MARKET OB/XF VALUE		0
TOTAL LAND VALUE - MARKET		75,000
TOTAL MARKET VALUE		571,185
SOH/AGL Deduction		0
ASSESSED VALUE		571,185
TOTAL EXEMPTION VALUE	HX HB	51,411
BASE TAXABLE VALUE		519,774
TOTAL JUST VALUE		571,185
NCON VALUE		0
INCOME VALUE		
PREVIOUS YEAR MKT VALUE		602,552

PERMIT NUM	DESCRIPTION	AMT	ISSUED
19012936	CO ISSUED	0	10/07/2020
19012936	NEW CONSTR	410,486	12/20/2019

SALES DATA

OFF RECORD Number	DATE	TYPE INST	Q / U	V / I	RSN CD	SALE PRICE
2276/1035	5/23/2019	WD	Q	V	02	65,000
GRANTOR: RIVERA YLATSIA						
GRANTEE: DOWNS WILLIAM M JR						
2217/1142	8/13/2018	WD	Q	V	01	52,500
GRANTOR: TAYLOR JAMES V						
GRANTEE: RIVERA YLATSIA						

BUILDING NOTES

BUILDING DIMENSIONS

BAS=[YR=2020;ORIG=0,0] W16 W1 S3 W18 N9 W14 N7 W15 S33 W10 S8 E10 S2 E18 S3 E2 E27 N3 E17 N30 $
FGR=[YR=2020;ORIG=-97,30] S29 E7 S2 E9 N2 E7 N29 W5 N6 W10 S6 W8 $
BAS=[YR=2020;ORIG=-74,20] N15 W6 W17 S19 E18 S6 E5 N10 $
FUS=[YR=2020;ORIG=-120,5] E2 E12 E2 S18 W16 N18 $
FSP=[YR=2020;ORIG=-16,0] N9 W20 S3 E1 S9 E18 N3 E1 $
FOP=[YR=2020;ORIG=-44,33] S6 E27 N6 W27 $
STR=[YR=2020;ORIG=-104,23] E3 S4 W19 N4 E16 $
PTO=[YR=2020;ORIG=-80,5] N6 W12 S6 E12 $
BAL=[YR=2020;ORIG=-118,5] N6 E12 S6 W12 $
FST=[YR=2020;ORIG=-97,24] S6 E8 N6 W8 $

EXTRA FEATURES

L N	OB/XF CODE	DESCRIPTION	BLD	CAP	L	W	UNITS	UT	Adj R	ADJ UNIT PRICE	ORIG COND	YEAR ON	YEAR ACTUAL	Q	% COND	OB/XF MKT VALUE	NOTES

LAND DESCRIPTION

TOTAL OB/XF 0

L N	USE CODE	CLS	LAND USE DESCRIPTION	CAP	R D	LOC ZONE	FRONT	DEPTH	TOT LND UTS	UNIT TYPE	D T	DPTH FACT	% COND	TOT ADJ	UNIT PRICE	ADJ UNIT PRICE	LAND VALUE	OTHER ADJUSTMENTS AND NOTES	YEAR	DENSITY	DECL	FRZ	YR	CONSRV
1	000134	C	RES POND	100	0006	OR	0.00	0.00	1.00	LT		1.00	1.00	1.00	75,000.00	75,000.00	75,000							

REVIEW DATE 03/27/2026 BY TWA Total Acres: 0.00 Total Land Value: 75,000 Market: 0 Agricultural: 0 Common: 75,000 PRINTED 07/09/2026 BY SYS