PT OF SW1/4 OF NE1/4
IN OR 1554/702
PARCELS 3-3 & 3-1

TAYLOR DONNA G
15469 COUNTY ROAD 108
HILLIARD, FL 32046

2026

30-3N-24-0000-0003-0030

NASSAU COUNTY PROPERTY

BUILDING CHARACTERISTICS

ELEMENT	CD	CONSTRUCTION
Exterior Wall	05	AVERAGE 90
Exterior Wall	21	STONE 10
Roof Structur	08	IRREGULAR 100
Roof Cover	03	COMP SHNGL 100
Interior Wall	05	DRYWALL 100
Interior Floo	14	CARPET 90
Interior Floo	11	CLAY TILE 10
Air Condition	03	CENTRAL 100
Heating Type	04	AIR DUCTED 100
Bedrooms		5 100
Bathrooms		4 100
Frame	02	WOOD FRAME 100
Stories	1.5	1.5 100
Units		0 100
Occupancy	00	NONE 100
Quality	03	Quality Level 03
DOR CODE	0100	SINGLE FAMILY
MAP NUM		MKT AREA 09
NEIGHBORHOOD/LOC	9001.00	

AREA TYPE	TOTAL GROSS AREA	PCT OF BASE	YEAR	TOT ADJ AREA	SUBAREA MARKET VALUE
BAL	136	15	2010	20	1,720
BAS	3,098	100	1993	3,098	266,393
BAS	750	100	2001	750	64,492
FCP	630	25	1997	158	13,586
FOP	154	30	1993	46	3,956
FOP	272	30	1993	82	7,051
FOP	272	30	1993	82	7,051
FOP	136	30	2010	41	3,525
FUS	714	100	1993	714	61,396
PTO	272	5	2010	14	1,204
TOTALS	6,434			5,005	430,373

MARKET ADJUSTMENTS

TYPE	MDL	EFF. AREA	TOT ADJ PTS	EFF. BASE RATE	REPL. COST NEW	AYB	EYB	ECON	FNCT		NORM	% COND
0100	01	5,005	103.0750	108.23	541,691	1974	1974	0	0	0	20.55	79.45

1 SINGLE FAM 100% - 2001 Heated Area: 4562 HX Base Yr 2001

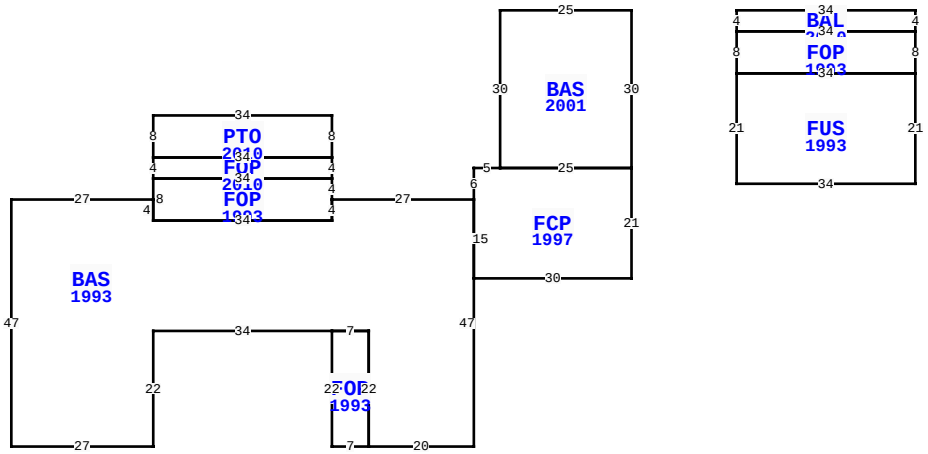

15469 CR 108, HILLIARD

BLD DATE		LGL DATE	
XF DATE		LAND DATE	05/12/2026 MLU
INC DATE		AG DATE	

NASSAU COUNTY PROPERTY — VALUATION SUMMARY

VALUATION BY	STANDARD
Tax Group: 4	Tax Dist:
BUILDING MARKET VALUE	430,373
TOTAL MARKET OB/XF VALUE	24,717
TOTAL LAND VALUE - MARKET	66,150
TOTAL MARKET VALUE	521,240
SOH/AGL Deduction	214,957
ASSESSED VALUE	306,283
TOTAL EXEMPTION VALUE	HX HB 51,411
BASE TAXABLE VALUE	254,872
TOTAL JUST VALUE	521,240
NCON VALUE	0
INCOME VALUE	
PREVIOUS YEAR MKT VALUE	516,617

PERMIT NUM	DESCRIPTION	AMT	ISSUED
C24000	ADDITION	5,490	10/01/2010
B0108180	XFOB	16,000	04/01/2001

SALES DATA

OFF RECORD Number	DATE	TYPE INST	Q / U	V / I	RSN CD	SALE PRICE
1554/0702	3/06/2008	QC	Q	I	06	100
GRANTOR: TAYLOR TOMMY H						
GRANTEE: TAYLOR DONNA G						
0960/1591	12/05/2000	WD	U	I	07	100
GRANTOR: ROGERS MICHAEL D & BR						
GRANTEE: TAYLOR TOMMY H & DO						

BUILDING NOTES

BUILDING DIMENSIONS

BAS=[YR=2001] W25 S30 FCP=[YR=1997] W5 S6 BAS=[YR=1993] W27 FOP=[YR=1993] N4 FOP=[YR=2010] N4 PTO=[YR=2010] N8 W34 S8 E34$ W34 S4 E34$ W34 S8 E34 N4 $ S4 W34 N4 W27 S47 E27 N22 E34 FOP=[YR=1993] S22 E7 N22 W7$E7 S22 E20 N47$ S15 E30 N21 W25$ E25 N30$ PTR=E20 BAL=[YR=2010] E34 S4 FOP=[YR=1993] S8 FUS=[YR=1993] S21 W34 N21 E34$ W34 N8 E34$ W34 N4$ W20$.

EXTRA FEATURES

LN	OB/XF CODE	DESCRIPTION	BLD	CAP	L	W	UNITS	UT	Adj R	ADJ UNIT PRICE	ORIG COND	YEAR ON	YEAR ACTUAL	Q	% COND	OB/XF MKT VALUE	NOTES
1	0504	FP-ELECTRI	0	100	0	0	1.00	UT	2,000.00	2,000.00	100	1985	1985	3	54	1,080	
2	0510	GARAGE WD-	0	100	78	35	2,730.00	SF	35.00	35.00	100	1995	1995	3	20	19,110	
3	0528	GLASS ROOM	0	100	17	13	221.00	SF	45.00	45.00	100	2001	2001	3	20	1,989	
5	1242	WD DECK A	0	100	0	0	228.00	SF	10.00	10.00	100	2010	2010	3	35	798	
6	0680	POLE SHED	0	100	40	15	600.00	SF	10.00	10.00	100	2003	2003	3	29	1,740	

LAND DESCRIPTION

TOTAL OB/XF 24,717

LN	USE CODE	CLS	LAND USE DESCRIPTION	CAP	RD	LOC ZONE	FRONT	DEPTH	TOT LND UTS	UNIT TYPE	DT	DPTH FACT	% COND	TOT ADJ	UNIT PRICE	ADJ UNIT PRICE	LAND VALUE	OTHER ADJUSTMENTS AND NOTES	YEAR	DENSITY	DECL	FRZ	YR	CONSRV
1	000100	C	RES	100	0004	OR	0.00	0.00	3.15	AC		1.00	1.00	0.75	28,000.00	21,000.00	66,150							

REVIEW DATE 01/01/2023 BY CD Total Acres: 3.15 Total Land Value: 66,150 Market: 0 Agricultural: 0 Common: 66,150 PRINTED 07/09/2026 BY SYS